General InformationBody Repairs, General Body Repairs

Edition 12.2016

Protected by copyright. Copying for private or commercial purposes, in part or in whole, is not permitted unless authorised by Volkswagen AG. Volkswagen AG does not guarantee or accept any liability with respect to the correctness of information in this document. Copyright by Volkswagen AG.

satelettronica

Repair Group

Protected by copyright. Copying for private or commercial purposes, in part or in whole, is not permitted unless authorised by Volkswagen AG. Volkswagen AG does not guarantee or accept any liability with respect to the correctness of information in this document. Copyright by Volkswagen AG.
satelettronica

Technical information should always be available to the foremen and mechanics, because their careful and constant adherence to the instructions is essential to ensure vehicle road-worthiness and safety. In addition, the normal basic safety precautions for working on motor vehicles must, as a matter of course, be observed.

All rights reserved.
No reproduction without prior agreement from publisher.

Copyright © 2017 Volkswagen AG, Wolfsburg

D4B807E3B5B

Contents

1 Safety Instructions . . . 1
1.1 Part removal . . . 1
1.2 Battery and welding operation . . . 1
1.3 Electronic control unit . . . 1
1.4 Paint, glass, soft pad and trim . . . 2
1.5 Fuel tank or fuel delivery pipeline . . . 2
1.6 Air conditioner . . . 2
1.7 Airbag system . . . 3
1.8 Check the seat belts . . . 3
1.9 Safety specifications for the seat belt tensioner . . . 6
1.10 Body repair on a vehicle equipped with the seat belt tensioners . . . 6
1.11 Perform cutting off, correcting and/or levelling on a vehicle equipped with airbags . . . 8
1.12 Remove the front seats with a side airbag . . . 8
2 Basic instructions . . . 9
2.1 Diagnosis of the accident vehicle . . . 9
2.2 Condition of the body and/or the parts for delivery to the painting workshop . . . 9
2.3 Correction . . . 9
2.4 Cutting . . . 9
2.5 Body-cut part and part section . . . 9
2.6 Original connection . . . 10
2.7 Galvanized body parts . . . 10
2.8 Remove the rest part . . . 10
2.9 New parts . . . 10
2.10 Parts . . . 10
2.11 Moulded foam plastic pads . . . 11
3 Symbolic interpretation . . . 12
3.1 Symbolic interpretation for welding . . . 12
3.2 Symbolic interpretation for the operation method . . . 12
4 Body repair tools . . . 15
4.1 Flaring tool V.A.G 1317 . . . 15
4.2 Punching pliers V.A.G 1329 . . . 15
4.3 Basic equipment V.A.G 1366/3 . . . 15
4.4 Bottom protection layer spray gun V.A.G 1379 . . . 15
4.5 Electric blower V.A.G 1416 . . . 16
4.6 Door tensioner V.A.G 1438 . . . 16
4.7 Body equipment component V.A.G 1439 . . . 16
4.8 Pneumatic cutting knife V.A.G 1523 A . . . 16
4.9 Air chisel V.A.G 1577 . . . 17
4.10 Edge closing iron block V.A.G 1585 . . . 17
4.11 Welding fume ventilator V.A.G 1586 . . . 17
4.12 Welding spot releasing device V.A.G 1731 . . . 17
4.13 Pneumatic spray gun V.A.G 1761/1 . . . 18
4.14 Pneumatic punching and thinning pliers VAS 1996 . . . 18
4.15 Pneumatic adhesive spray gun V.A.G 2005 . . . 18
4.16 Door hinge correction tool . . . 18
4.17 Hose kit 5023 for the inert gas protection welding . . . 19
4.18 Angle grinder VAS 5174 . . . 19
4.19 Angle grinder VAS 5175 . . . 19
4.20 Wire brush VAS 5182 . . . 19
5 Body bonding . . . 20
5.1 Transporter 1991 → . . . 20
5.2 Bonding types . . . 20
5.3 Repair method for replacing the parts . . . 21

Protected by copyright. Copying for private or commercial purposes, in part or in whole, is not permitted unless authorised by Volkswagen AG. Volkswagen AG does not guarantee or accept any liability with respect to the correctness of information in this document. Copyright by Volkswagen AG.
satelettronica

6 Corrosion protection measures . . . 22
6.1 Corrosion protection . . . 22
7 Waste disposal instructions . . . 23
7.1 Waste disposal . . . 23
7.2 Air pressure tappet exhaust . . . 24
7.3 Airbag . . . 24
8 Contact corrosion protection . . . 25
8.1 Connection of aluminium alloy/magnesium alloy with steel . . . 25
9 Steel plate repair . . . 26
9.1 High-strength body plate . . . 26
9.2 Galvanized body parts . . . 26
9.3 Welding on the galvanized body steel plate . . . 27
9.4 Tearing test . . . 28
10 Aluminium repair . . . 29
10.1 Painting . . . 29
10.2 Surface treatment . . . 29
10.3 Levelling . . . 30
10.4 Temperature control for heating . . . 30
11 Plastic repair method . . . 31
11.1 Material . . . 31
11.2 Repairing the pit . . . 32
11.3 Repairing the scratch . . . 34
11.4 Repair the crack . . . 35
11.5 Repairing the small hole (the diameter is more than 30 mm) . . . 36
11.6 Plastic repair (glass fibre material) . . . 37
11.7 Repair process . . . 38
12 Glass repair . . . 40
12.1 Repairing the windshield . . . 40

Protected by copyright. Copying for private or commercial purposes, in part or in whole, is not permitted unless authorised by Volkswagen AG. Volkswagen AG does not guarantee or accept any liability with respect to the correctness of information in this document. Copyright by Volkswagen AG.

satelettronica

1 Safety Instructions

(Edition 12.2016)

1.1 Part removal

Before the gravity centre position of the vehicle changes greatly due to the removal, the vehicle must be securely fixed on the lifting platform.

1.2 Battery and welding operation

Note

Before disconnecting the battery grounding, first obtain the code of the radio. Before handing over the vehicle to the customer, make the radio ready for playing through entering the correct code.

Before carrying out any welding, always disconnect the two terminals of the battery, and then cover the two poles of the battery.

Before carrying out any operation producing possible sparks near the battery, always remove the vehicle battery.

WARNING

Switch on the ignition before connecting the battery!

When the battery is connected, do not allow anyone in the vehicle!

1.3 Electronic control unit

The grounding terminal of the welding machine is directly connected to parts to be welded. In addition, there shall be no electrical insulation part between the grounding terminal and the welding area.

The electronic control unit and the electrical wire are not allowed to come into contact with the grounding terminal or the welding electrode.

1.3.1 Processing of the electronic control unit after repair due to a traffic accident

After the traffic accident occurs, change of the electric control unit will not be necessary until there is at least one of the following situations:

- The housing is significantly deformed or damaged.
- The instrument appearance is not damaged, but the bearing surface or holder is deformed.
- The plug connection is damaged or rusted due to moisture.
- The functional check or unit self-diagnosis procedure may show fault“Control Unit Damaged”.

If an electronic part is removed as required by the service operation, such as ABS control unit, and then reused, its function shall be tested according to existing materials after installation, such as using V.A.G self-diagnosis procedure.

Volkswagen AG does not guarantee or accept any liability with respect to the correctness of information in this document. Copyright by Volkswagen AG.
Copyright. Copying for private or commercial purposes, in part or in whole, is not permitted unless authorised by Volkswagen AG.
satelettronica

1.4 Paint, glass, soft pad and trim

Other vehicles under no protection are not allowed to be parked in the operation area for the body repair. (There is a risk of fire due to spark, battery, paint and damaged glass).

1.5 Fuel tank or fuel delivery pipeline

An extreme care shall be exercised in case that grinding and welding operations are carried out in the fuel tank or other fuel delivery part area. These parts must be removed in case of potential safety hazards.

1.6 Air conditioner

After refrigerant is added into the air conditioner, its components are allowed to be neither welded, nor brazed or soldered. If there is a risk to heat the air conditioner components during welding and soldering on the vehicle, welding is not allowed either. In term of paint repair, temperature of the object in the drying oven or the preheating area is only allowed to reach 80°C, as there will be a large overpressure in the heated equipment, which may cause an equipment burst.

Note

In case that welding is performed near the refrigerant hose, it is also necessary to withdraw the refrigerant in the refrigerant circuit. Invisible ultraviolet will be released during welding, and they may infiltrate into the refrigerant hose and break down the refrigerant.

1.6.1 Remedial measures:

Suck the refrigerant circuit ⇒ heater and air conditioner; Rep. gr. 87 .

The drained air conditioner may only be filled in a maintenance shop equipped with special V.A.G equipment. In case of required safety measures, the equipment must be turned on to drain the refrigerant.

If necessary during repairing the vehicle, drain the refrigerant circuit, and avoid contact with the refrigerant or the refrigerant vapour!

Wear rubber gloves and goggles to protect your hands and eyes! The reason is that refrigerant spilt onto the unprotected human body parts may cause a frostbite in a serious situation.

WARNING

It is suggested to prepare a rinsing bottle for flushing your eyes. If liquid refrigerant enters your eyes, rinse immediately with water for 15 minutes.

Then wash your eyes with eye drop, and go to see an ophthalmologist right away even if your eyes do not hurt. You must tell the doctor that the frostbite is caused by refrigerant R12 or R134a.

If the refrigerant is still in contact with other parts of the body even though the safety measures are followed, these areas also need to be thoroughly rinsed with cold water immediately for at least 15 minutes.

Although refrigerant causes no fire risk, smoking is not allowed in a room where the refrigerant is placed. The reason is that a lit

Protected by copyright. Copying for private or commercial purposes, in part, is not permitted unless authorised by Volkswagen AG. Volkswagen AG does not guarantee or accept any liability with respect to the correctness of information in this document. Copyright by Volkswagen AG.

satelettronica

cigarette has a high temperature which may cause chemical decomposition of the refrigerant gas. Inhalation of the toxic decomposition generated by this will result in an irritable cough and nausea.

1.7 Airbag system

Repair instructions ⇒ internal body repair; Rep. gr. 69 .

During operation on the airbag system as well as correction operation within the body repair scope, the battery grounding must be disconnected.

> **WARNING**
>
> *Switch on the ignition before connecting the battery!*
>
> *When the battery is connected, do not allow anyone in the vehicle!*

The temperature of the airbag components must not exceed 100° C, not even instantaneously.

The airbag components are not allowed to come into contact with grease, cleaning agent, oil or the like.

The mechanically damaged airbag components must be replaced. =>Disposal instructions ⇒ page 23 .

After coming in to contact with a triggered airbag unit, wash your hands!

1.8 Check the seat belts

> **WARNING**
>
> *Systematically check the seat belt system every time after an accident! If one item is found damaged according to the items to be checked, the customer must be informed of the necessity to replace the seat belt.*

Items to be checked:

- Belt body
- Automatic retractor (locking function)
- Visual inspection of the seat belt buckle
- Seat belt buckle function
- Seat belt guide member and tongue
- Fixing piece and fixing point
- Automatic waist seat belt retractor

Note

If the customer refuses to replace a damaged seat belt, corresponding notes must be made.

1.8.1 Belt body

– Pull the seat belt completely out of the automatic seat belt retractor or the waist seat belt adjuster.

Protected by copyright. Copying for private or commercial purposes, in part or whole, is not permitted unless authorised by Volkswagen AG. Volkswagen AG does not guarantee or accept any liability with respect to the correctness of information in this document. Copyright by Volkswagen AG.

satelettronica

Protected by copyright. Copying for private or commercial purposes, in any form, is not permitted unless authorised by Volkswagen AG. Volkswagen AG does not guarantee or accept any liability with respect to the correctness of information in this document. Copyright by Volkswagen AG.

– Check that whether the seat belt is dirty, and if necessary, clean it with neutral soap solution=>see the instructions for use.

- If one of the damages (1 and 2) indicated in the following is confirmed on a traffic accident vehicle, replace the seat belt together with the seat belt buckle.
- Even there is no accident, the damaged seat belt must be replaced if there is any confirmed damage as shown in the following 1, 2 or 3.

1-The belt body is cut, torn or scratched.

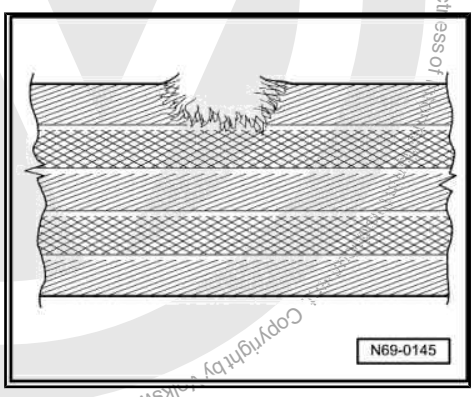

2-The fabric on the belt edge is torn.

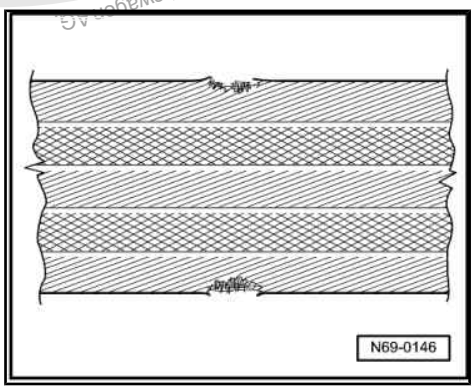

3-There are burns by cigarettes and the like.

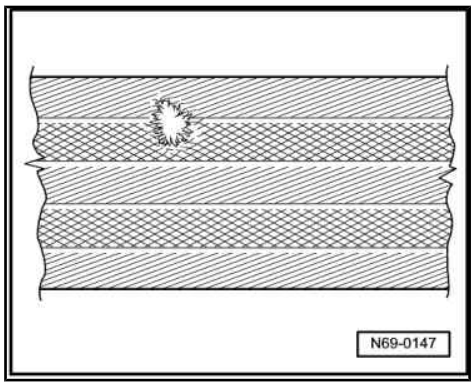

1.8.2 Automatic retractor (locking function)

The automatic seat belt retractor has two locking functions.

♦ The first locking function is triggered when the seat belt is quickly extracted from the automatic seat belt retractor (belt extraction acceleration).

Checking

– Vigorously pull the seat belt out of the automatic retractor.

- No locking function-replace the seat belt together with the seat belt buckle.

satelettronica

- If the seat belt extraction or retraction function does not work, first check that whether the automatic seat belt retractor is in the correct position.
- The second locking function is triggered through change of the vehicle operation process (locking function associated with the vehicle).

Checking

– Fasten the seat belt.
– Accelerate the vehicle to 20 km/h, and then perform an emergency braking using the foot brake.
- If the seat belt is not locked by the locking mechanism during the braking process, replace the seat belt together with the seat belt buckle.

WARNING

For safety reason, this driving test shall be performed on a road segment without other running vehicles, in order to avoid posing a danger to the other road users.

1.8.3 Visual inspection of the seat belt buckle

– Check whether there is cracking and peeling in the seat belt buckle.
- Replace the seat belt together with the seat belt buckle in case of damage.

1.8.4 Seat belt buckle function

Check the seat belt locking mechanism:

– Push the tongue into the seat belt buckle till you hear the engagement sound. Vigorously pull the seat belt to check whether the closing mechanism locks.
- Even there is only one locking failure of the tongue in the seat belt buckle for over 5 inspections, the seat belt must be replaced together with the seat belt buckle.

Check the unlocking mechanism:

– Use your finger to press the button on the seat belt buckle to release the seat belt. When the belt body is released, the tongue must automatically come out of the seat belt buckle.
- Check for least 5 times. As long as the latch does not pop out for at least one time, replace the seat belt together with the seat belt buckle.

WARNING

it is not never permissible to use lubricant on the button of the seat belt buckle to eliminate the noise or blockage in case of the seat belt operation.

1.8.5 Seat belt guide member and tongue

After the seat belt system is stressed (when the seat belt is damaged in an accident), there will be some small parallel clefts on the guide member with a plastic coating. (This is different from the wear often seen, and the latter shows smooth wear without fine patterns).

Copyright by Volkswagen AG. Volkswagen AG does not guarantee or accept any liability with respect to the correctness of information in this document. Copyright by Volkswagen AG. Reproduction and publication not permitted, unless authorised by Volkswagen AG. Passing on to third parties not permitted. Reproduction and publication only permitted for private, non-commercial use.

satelettronica

– Check the plastic materials for deformation, peeling and cracking.

- Replace the seat belt together with the seat belt buckle in case of clefts and/or damages.

1.8.6 Fixing piece and fixing point

- The fixing strip/bracket is deformed (stretched).
- The height adjustment device does not work.
- Fixing points (seat, door post or vehicle floor) are deformed or the threads are damaged.

- Replace the seat belt together with the seat belt buckle in case of damage found on these parts.
- Replace the fixing points.

Note

For damage (such as wear) not caused by a traffic accident, only replace corresponding damaged parts.

1.9 Safety specifications for the seat belt tensioner

- Test, removal, installation and maintenance shall only be performed by trained personnel.
- Blasting ignition material has no expiration date, and that is to say it may be kept without time limit and requires no maintenance.
- The components of the seat belt tensioner are allowed to be neither opened nor repaired; only new components may be used in principle.
- A seat belt tensioner unit falling to the ground is not allowed to be reinstalled in the vehicle.
- In case of mechanical damage (buckling deformation and crack) to the seat belt tensioner, it must be replaced.
- The tensioner unit must be installed immediately after it is taken out of the shipping container.
- When the work is interrupted, the seat belt tensioner unit shall be put back into the shipping container.
- Do not randomly place the seat belt tensioner unit.
- Do not use grease, cleaning agent or similar media to process the seat belt tensioner unit, and do not expose it to a temperature higher than 100°C, even if the period is very short.

1.10 Body repair on a vehicle equipped with the seat belt tensioners

WARNING

Before cutting off, correcting and/or levelling, you must remove a mechanical blasting seat belt tensioner without the wearing identification function (trigger lock). The battery grounding must be disconnected for an electric blasting seat belt tensioner.

Protected by copyright. Copying or distribution without Volkswagen AG's express authorization is prohibited. Copyright by Volkswagen AG. Volkswagen AG does not guarantee or accept any liability with respect to the correctness of information in this document. Copyright by Volkswagen AG.

satelettronica

Note

If the seat belt is completely retracted, in case of an accident, the wearing identification device (trigger lock) will hinder triggering of the mechanical blasting seat belt tensioner.

WARNING

During cutting off, correcting and/or levelling, do not pull out the seat belt for the seat belt tensioner with a wearing identification device. In case of a large vibration caused during cutting off, correcting and/or levelling, you must also remove the seat belt tensioner with a wearing identification device.

There is no wearing identification device on the vehicle seat belt tensioners listed below:

- Golf 1992 →
- Golf Cabriolet 1994 →
- Passat 1988 →
- Passat 1994 →
- Polo 1995 →
- Polo Classic 1996 →
- Polo Wagon 1998 →

Disassemble and install the seat belt with a tensioner ⇒ internal body repair; Rep. gr. 69 .

1.10.1 The following vehicles have been equipped with:

	Mechanical seat belt tensioner with a wearing identification device	Electric seat belt tensioner
Passat 1997 → front and rear	X	
Golf 1998 → front with side airbags		X
Golf 1998 → front without side airbags	X	
New Beetle 1999 → front with side airbags		X
New Beetle 1999 → front with side airbags (only the first year model in America)	X	
New Beetle 1999 → front without side airbags	X	
Lupo 1999 → front	X	
Transporter 1991 → front (since the year 1998 model)	X	
LT 1997 → front		X

Protected by copyright. Copying for private or commercial purposes, in part or in whole, is not permitted unless authorised by Volkswagen AG. Volkswagen AG does not guarantee or accept any liability with respect to the correctness of information in this document. Copyright by Volkswagen AG.
satelettronica

1.11 Perform cutting off, correcting and/or levelling on a vehicle equipped with airbags

During operation on the airbag system as well as correction operation within the body repair scope, the battery grounding must be disconnected.

> **WARNING**
>
> *Switch on the ignition before connecting the battery!*
>
> *When the battery is connected, do not allow anyone in the vehicle!*

Repair instructions ⇒ internal body repair; Rep. gr. 69 .

1.12 Remove the front seats with a side airbag

> **WARNING**
>
> *In case of removing the front seats, be sure to follow the safety instructions.*

The safety instructions may be obtained from the repair manual of corresponding models ⇒ internal body repair; Rep. gr. 69 .

Protected by copyright. Copying for private or commercial purposes, in part or in whole is not permitted unless authorised by Volkswagen AG. Volkswagen AG does not guarantee or accept any liability with respect to the correctness of information in this document. Copyright by Volkswagen AG.

satelettronica

2 Basic instructions

2.1 Diagnosis of the accident vehicle

In case of the accident vehicle repair, the occasionally undiscovered damage on the chassis and the unit suspension may cause serious damage in future. In case of a traffic accident, this means that the vehicle has borne a high load, and therefore do not only check axles, but also pay attention to the following parts:

- Determine whether the functions of the steering system and the steering tie rod are normal through checking the steering angle. Visually check for bending or cracking.
- Check the chassis and all chassis components, e.g. swing arm/longitudinal control arm, shock strut, steering knuckle, stabilizer bar, secondary beam, axle body and their fixing pieces for bending or cracking.
- Check the rims and the tyres for damage extent, radial run-out and unbalance degree. Check the tyre pattern depth and the tyre side, and check the tyre inflation pressure.
- Check the suspension devices for the engine, the gearbox, the axles and the exhaust device for damage.
- In the end, perform a proper trial driving after the repair, in order to ensure traffic safety and good mechanical condition of the vehicle for delivery to the customer without doubt.

2.2 Condition of the body and/or the parts for delivery to the painting workshop

Before delivery of the repaired vehicle or the individual parts to the painting workshop, sandpapers of a grit size P80 to P100 must be used to grind the repaired or corrected as well as scraped (if necessary) surface as a preparation for the subsequent painting.

This preparation falls into the work scope of the sheet metal workshop, and is included in the repair period.

2.3 Correction

During batch production, the body and the underbody device are mainly made of the cold-deformed deep-drawn steel plate. For this reason, recovery deformation for the accident damage is carried out in the same way.

If recovery to the shape before the accident fails due to a serious damage, the damaged part shall be cut off after the connection is corrected.

2.4 Cutting

The cutting influencing the body structure strength and then affecting the vehicle driving and traffic safety must be carried out following relevant repair manual.

2.5 Body-cut part and part section

This“Cut Part”is interpreted as cutting for an individual part (e.g. sharp front and rear ends), and the cut part is provided by the part warehouse.

– On the contrary,“Part Section”is to be cut from the part itself. Operation shall be carried out by strictly following the way described and illustrated in the body repair manual in a specific situation.

Copyright by Volkswagen AG. Copyright by Volkswagen AG does not guarantee or accept any liability with respect to the correctness of information in this document.
satelettronica

– Since using“Cut Part”or“Part Section”as well as applying which special tool will influence the period, various tools and equipment are described separately in the repair manual.

2.6 Original connection

“Original Connection”is interpreted as welding connection adopted for vehicle manufacturing.

The welding connection positions shall be recovered during the body repair.

Make sure that the welding spots in case of repair are no less than the welding spots in the batch production.

The methods and processes different from the original connection are described in relevant body repair manual.

2.7 Galvanized body parts

With use of the fully galvanized steel plates, the body is already of a high corrosion resistance in the frame production phase. In order to maintain the performance of anti-penetration rust, make sure to follow ⇒ page 26 the operation procedures in the repair instructions.

WARNING

Since there is toxic zinc oxide in the welding fume arising from welding of the galvanized steel plates, a good ventilation in the operation site must be provided, and a proper smoke ventilator (such as -V.A.G 1586-) shall be used to discharge the smoke.

2.8 Remove the rest part

If the damaged body part will be roughly cut off according to the cutting position in relevant repair manual, e.g. using body saw - V.A.G 1523- , most spot welding connections shall be drilled out using welding spot releasing device - V.A.G 1731- .

In addition, it is suggested to use flat-grinding machine - V.A.G 1529- and angle grinder, in order to remove the welding spot connections which may not be removed by the welding spot releasing device.

2.9 New parts

For the new parts e.g.: Lower edge beam which may not be accessed from the interior after the repair, due to the corrosion prevention requirement, consistent paint with the vehicle colour shall be sprayed on its cavity before welding. It is suggested to cover the welding connection positions using adhesive tapes at this time.

2.10 Parts

Due to reduction of the stock part categories, the provided parts are usually of“basic models”.

For example:

- There is no hole for the trim or the antenna in the fenders of Golf 1984→1991.
- There is no hole for the rear windshield wiper or the interior panel in the rear trunk lid of Transporter 1991→.

In this case, it is suggested for the repair shop to make a“template”using the damaged part.

Protected by copyright. Copying for private or commercial purposes, in part or in whole, is not permitted unless authorised by Volkswagen AG. Volkswagen AG does not guarantee or accept any liability with respect to the correctness of information in this document. Copyright by Volkswagen AG.

satelettronica

Such as holes for for the rear windshield wiper in the rear trunk lid of Transporter 1991→:

- Use body saw -V.A.G 1523- to cut off a part of the trunk lid, and pay attention to the significant contour at this time. For the VW emblem notch and the upper wiper hole edge as examples, remove the burrs of the side cut, and use fabric-reinforced adhesive tapes for protection.

Before painting the new parts and in case of installing the module and marking the holes to be drilled, you must pay attention to the material strength of the module.

Before delivering the parts (such as doors, engine compartment baffle/rear trunk cover or fenders) to the painting workshop, please check for transportation damage. If transportation damage or other damages are found in case of assembly, this may avoid a repeated painting.

2.11 Moulded foam plastic pads

These moulded parts are installed in the body manufacturing process, and their volumes begin to grow from about 180°C in the drying oven in the painting workshop.

Use the moulded foam plastic pads in the following methods:

– Remove the residual foam from the vehicle.

– Restore the paint structure. If necessary, use glass primer - DCN 009 200 02- to brush twice (the second coat may be applied in the opposite direction)-the airdry time shall be at least 10 minutes.

Conditions

– Before starting these work steps, ensure that the parts for replacement must be ready though preparation, such as cutting, adjustment and corrosion protection measures.

Replace the moulded foam plastic pads

– Apply seal - AKD 497 010 04 R10- around the moulded foam plastic pads.

– Install the moulded foam plastic pads in corresponding positions of the vehicle.

– Fix the new parts (such as column A) in the mounting positions. Gently press the new parts in the moulded foam plastic pad area till a close contact is achieved, and then weld them.

– Inert gas protection welding (SG) must not be used within 15 mm from both sides of the moulded foam plastic pads.

– After the vehicle is painted, use the inner cavity spray wax - DCN 330 KD2 Z1- to carry out anti-corrosion treatment in the repair area.

Protected by copyright. Copying for private or commercial purposes, in part or in whole, is not permitted unless authorised by Volkswagen AG. Volkswagen AG does not guarantee or accept any liability with respect to the correctness of information in this document. Copyright by Volkswagen AG.
satelettronica

3 Symbolic interpretation

3.1 Symbolic interpretation for welding

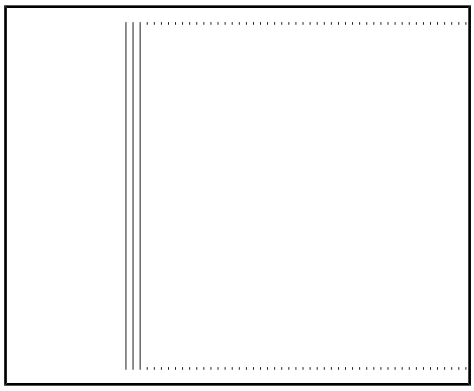

RP resistance pressure spot weld (single row) RP = resistance pressure spot welding

RP resistance pressure spot weld (double rows)

RP resistance pressure spot weld (double staggered rows)

SG inert gas protection plug weld SG = inert gas plug welding

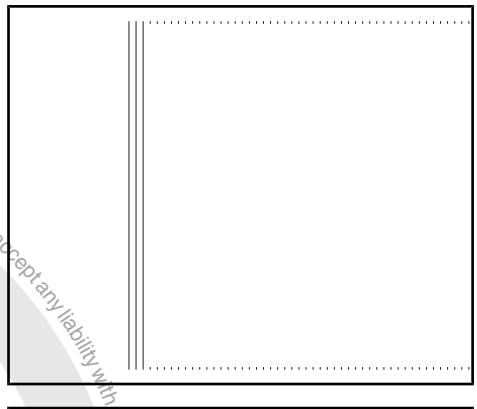

SG inert gas protection spot welding

SG full inert gas protection weld

SG discontinuous full inert gas protection weld

Brazing

3.2 Symbolic interpretation for the operation method

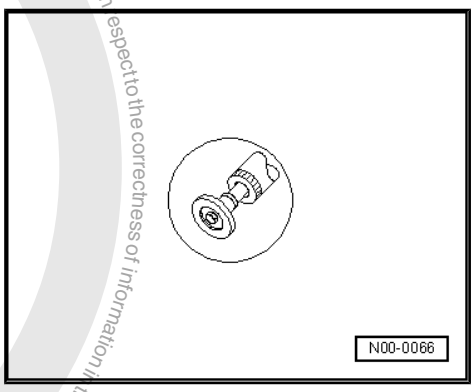

3.2.1 Grinding

– Use an angle grinder to remove the material adhering to the weld.

Note

Try not to reduce the thickness of the outer plate in case of grinding the weld, but a slight reduction is allowed.

Protected by copyright. Copying for private or commercial purposes, in part or in whole, is not permitted unless authorised by Volkswagen AG. Volkswagen AG does not guarantee or accept any liability with respect to the correctness of information in this document. Copyright by Volkswagen AG.

satelettronica

Protected by copyright. Copying for private or commercial purposes, in part or in whole, is not permitted unless authorised by Volkswagen AG. Volkswagen AG does not guarantee or accept any liability with respect to the correctness of information in this document. Copyright by Volkswagen AG.

3.2.2 Thinning

– The purpose is to carry out overlap welding.

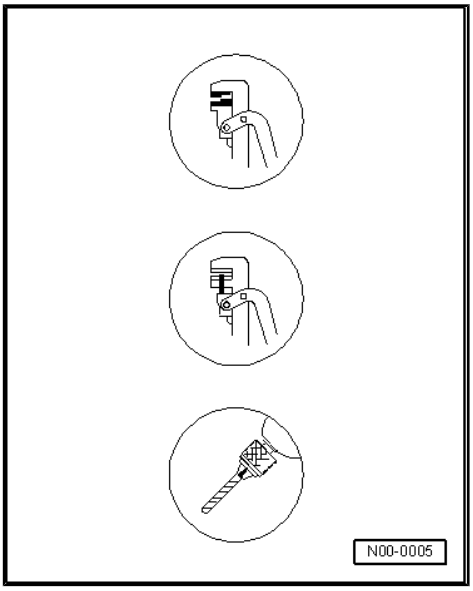

3.2.3 Punching

– Drill in the new parts for carrying out subsequent inert gas protection plug welding.

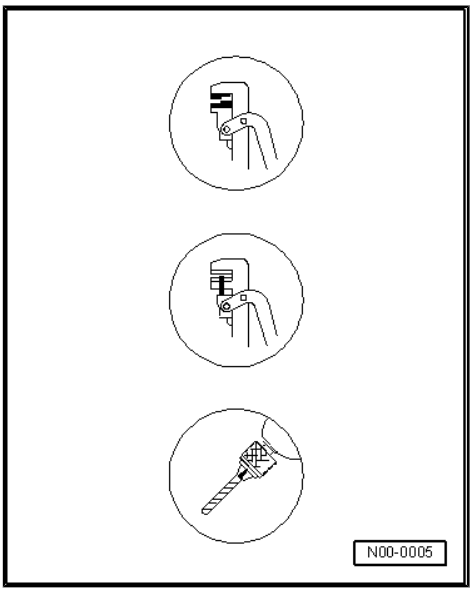

3.2.4 Drilling

– Drill out the welding spots for carrying out subsequent inert gas protection plug welding or resistance pressure spot welding (original connection).

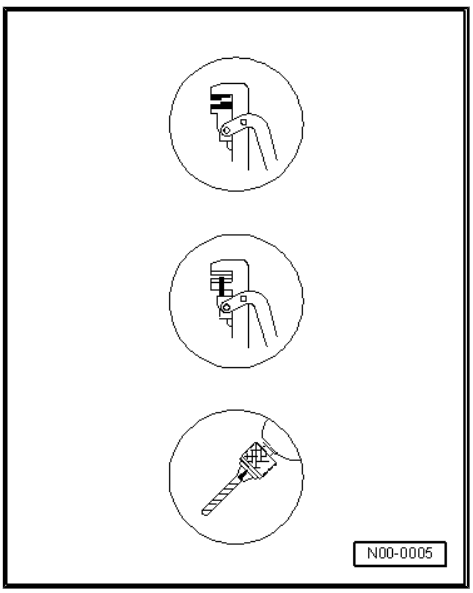

satelettronica

3.2.5 Polishing

- Use wire brush -VAS 5182- to remove the paint in the not easily accessible areas (such as the inside of the roof frame).

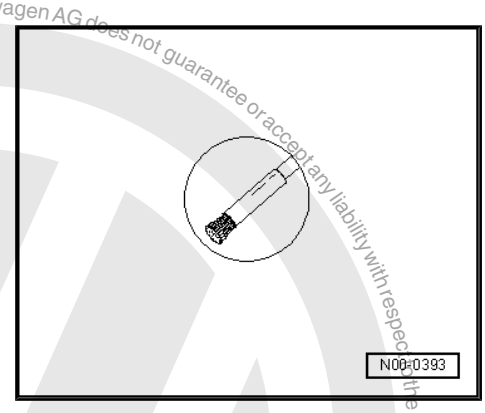

3.2.6 Cavity corrosion protection

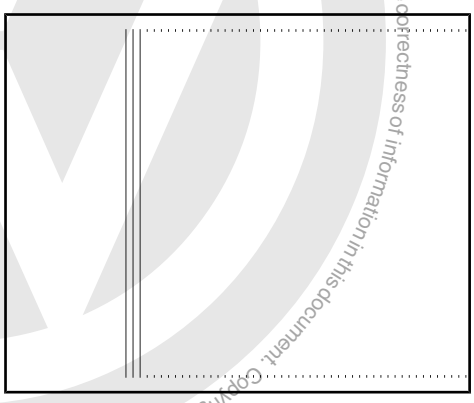

3.2.7 Bonding

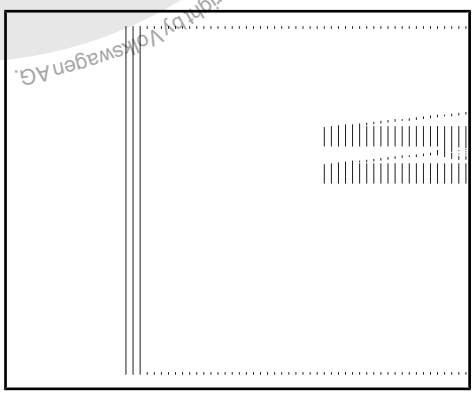

3.2.8 Precise sealing

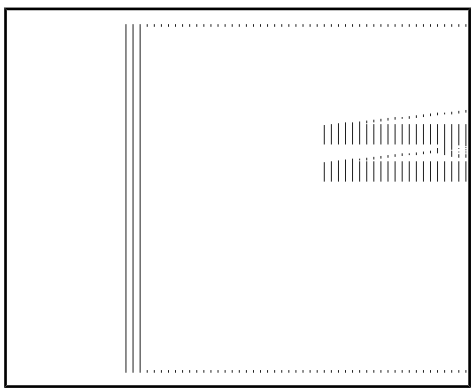

Protected by copyright. Copying for private or commercial purposes, in part or in whole, is not permitted unless authorised by Volkswagen AG. Volkswagen AG does not guarantee or accept any liability with respect to the correctness of information in this document. Copyright by Volkswagen AG.

satelettronica

4 Body repair tools

Note

The following tools are listed according to V.A.G/VAS serial numbers.

4.1 Flaring tool -V.A.G 1317-

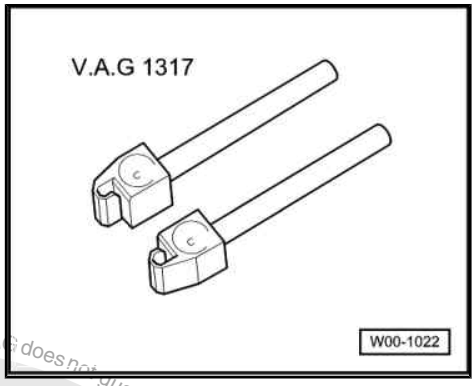

4.2 Punching pliers -V.A.G 1329-

- Punching the parts before welding

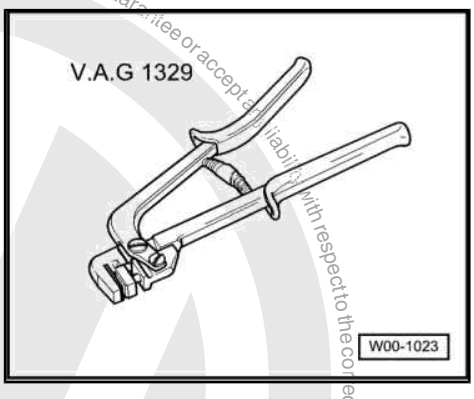

4.3 Basic equipment -V.A.G 1366/3-

- Body correction tool provided together with the correction frame

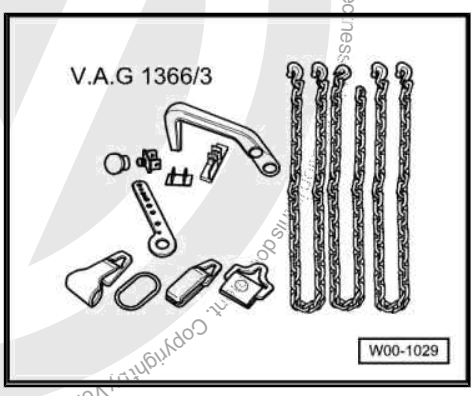

4.4 Bottom protection layer spray gun - V.A.G 1379-

- Spraying the bottom protection layer paint

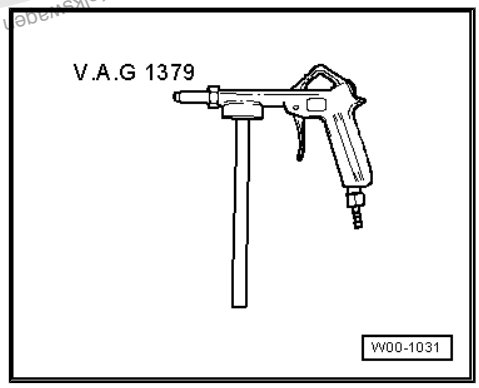

satelettronica

4.5 Electric blower -V.A.G 1416-

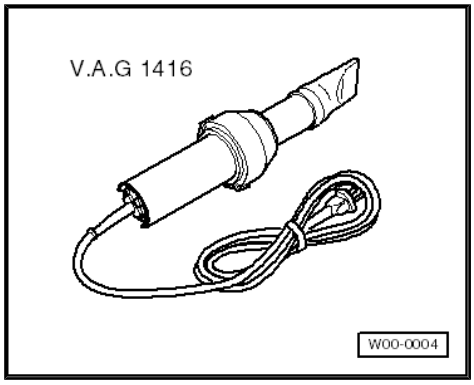

- Releasing the frozen locks, trunk lid and doors
- Drying the ignition and illuminating systems
- Heating the fenders for their easier removal from the body
- Drying the body interior without removing the surface skin
- Accelerating the adhesive drying
- Remove the adhesive on the body and the windshield surface more quickly and easily

4.6 Door tensioner -V.A.G 1438-

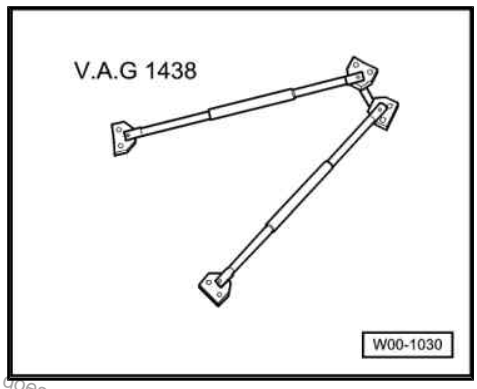

- During body repair, ensuring a correct door gap, and also used as an auxiliary tool in case of welding of different steel plate materials

4.7 Body equipment component - V.A.G 1439-

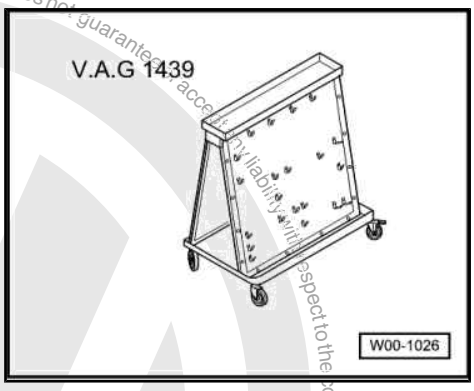

4.8 Pneumatic cutting knife -V.A.G 1523 A-

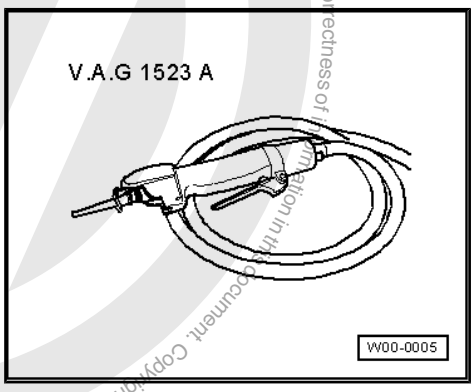

- Used for cutting the body material

Protected by copyright. Copying for private or commercial purposes, in part or in whole, is not permitted unless authorised by Volkswagen AG. Volkswagen AG does not guarantee or accept any liability with respect to the correctness of information in this document. Copyright by Volkswagen AG.

satelettronica

4.9 Air chisel -V.A.G 1577-

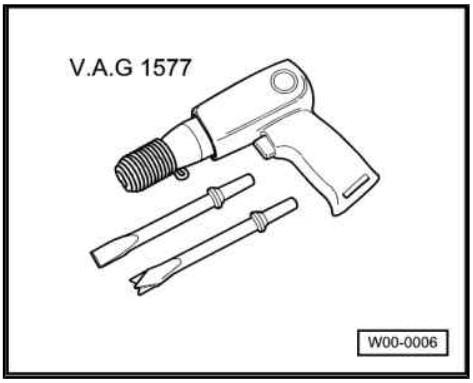

4.10 Edge closing iron block -V.A.G 1585-

- Used for closing the curved weld during the body repair

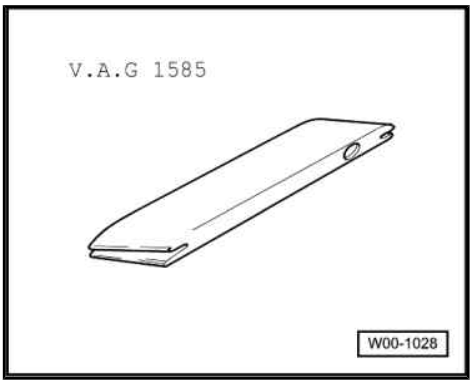

4.11 Welding fume ventilator -V.A.G 1586-

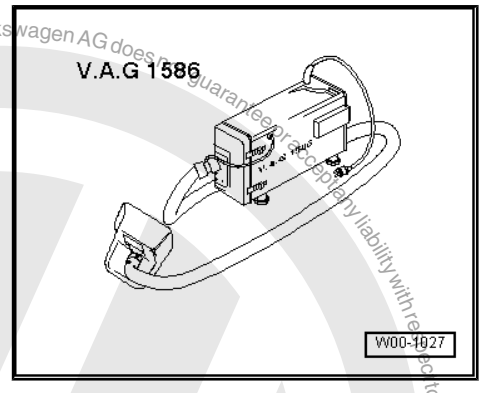

4.12 Welding spot releasing device - V.A.G 1731-

- Releasing the welding point connection during the body repair

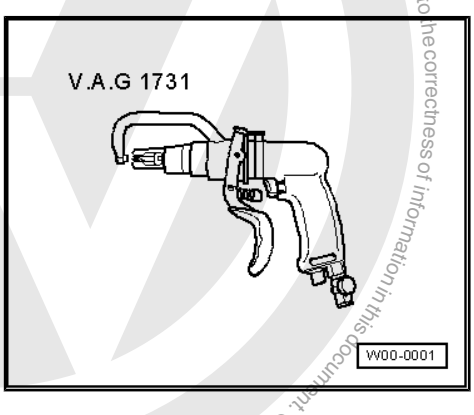

Protected by copyright. Copying for private or commercial purposes, in part or in whole, is not permitted unless authorised by Volkswagen AG. Volkswagen AG does not guarantee or accept any liability with respect to the correctness of information in this document. Copyright by Volkswagen AG.
satelettronica

4.13 Pneumatic spray gun -V.A.G 1761/1-

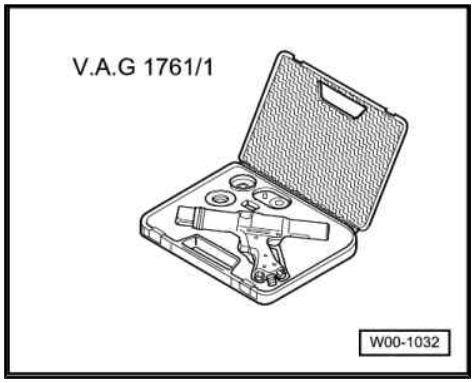

The pneumatic spray gun with original factory optical lens is used for spraying the seal and bottom protection layer paint.

In addition, all 310 ml adhesive cartridges may be handled by the spray gun.

4.14 Pneumatic punching and thinning pliers -VAS 1996-

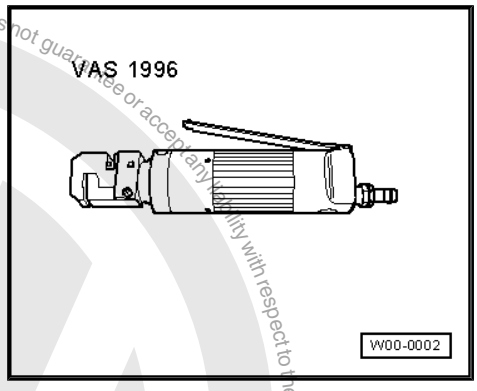

4.15 Pneumatic adhesive spray gun - V.A.G 2005-

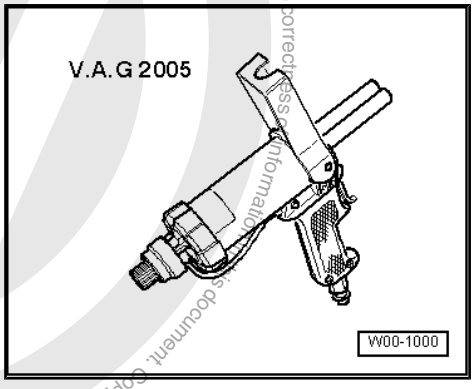

- Used for the body sealant

4.16 Door hinge correction tool

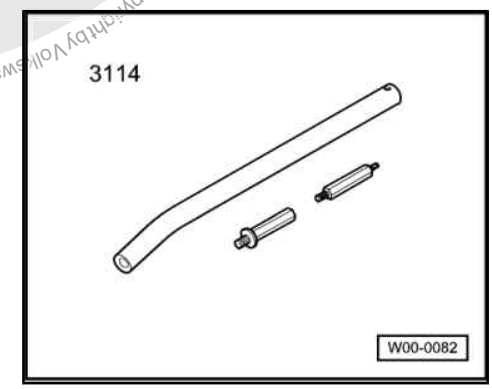

Protected by copyright. Copying for private or commercial purposes, in part or in whole, is not permitted unless authorised by Volkswagen AG. Volkswagen AG does not guarantee or accept any liability with respect to the correctness of information in this document. Copyright by Volkswagen AG.
satelettronica

Protected by copyright. Copying for private or commercial purposes, in part or in whole, is not permitted unless authorised by Volkswagen AG. Volkswagen AG does not guarantee or accept any liability with respect to the correctness of information in this document. Copyright by Volkswagen AG.

4.17 Hose kit 5023 for the inert gas protection welding

- Injector hose assembly 5023/1

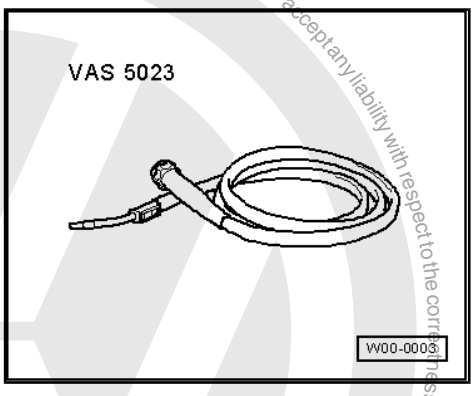

4.18 Angle grinder -VAS 5174-

- 710 W; diameter 115 mm

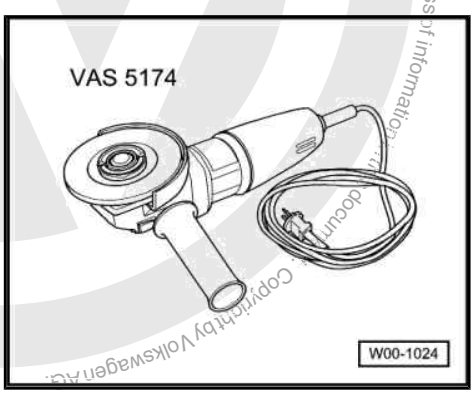

4.19 Angle grinder -VAS 5175-

- 1500 W; diameter 180 mm

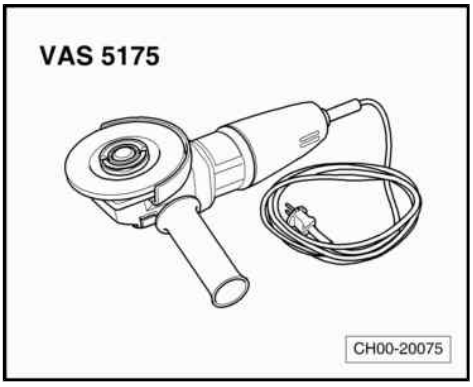

4.20 Wire brush -VAS 5182-

- Use the wire brush to remove the paint in the not easily accessible areas (such as the inside of the roof frame).

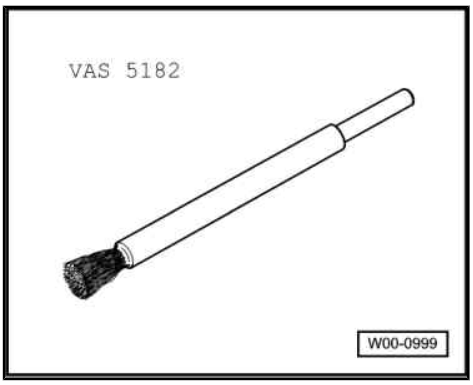

satelettronica

5 Body bonding

5.1 Transporter 1991 →

Handle the bonding points in the following operation steps for repair:

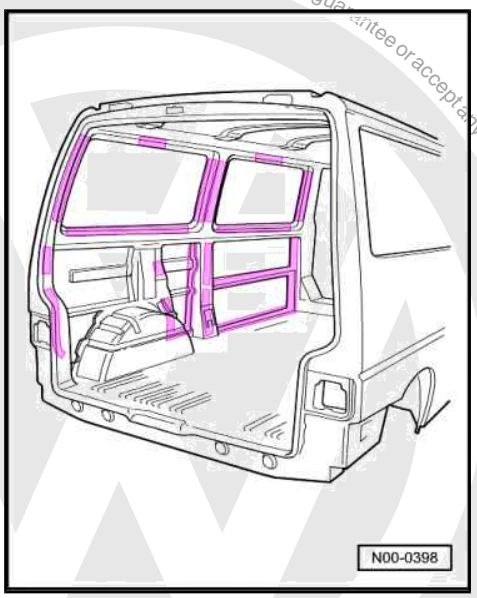

5.1.1 Separation process:

– Cut the bonding points open using a vibrating cutting knife.

– Use a knife and a scraper to remove the residual adhesive.

5.1.2 Bonding process:

♦ Material: DCN 180 KD3

– See the instructions for use of the repair adhesive for preparation measures of the bonding surface and tips related to processing.

5.2 Bonding types

In order to improve the stiffness and strength of the body, the manufacturer uses more and more bonding and spot welding connections on the body. They are distinguished as follows:

5.2.1 Bonding-strong

Plates are only bonded with adhesive.

Overlap width of the strong bonding surface shall be no less than 2 mm and no more than 4 mm. You must align the bonding surface if necessary.

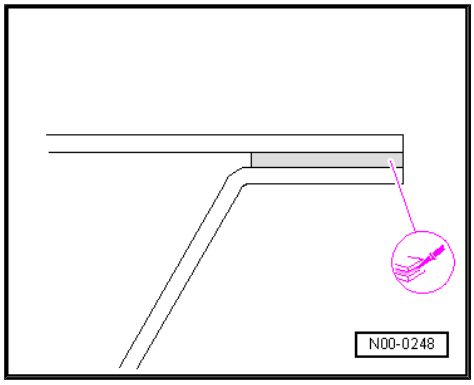

Repair measure

– Use the material specified in the repair manual or the accessory manual to restore the bonding.

Protected by copyright. Copying for private or commercial purposes, in part or in whole, is not permitted unless authorised by Volkswagen AG. Volkswagen AG does not guarantee or accept any liability with respect to the correctness of information in this document. Copyright by Volkswagen AG.

satelettronica

5.2.2 Bonding-spot welding

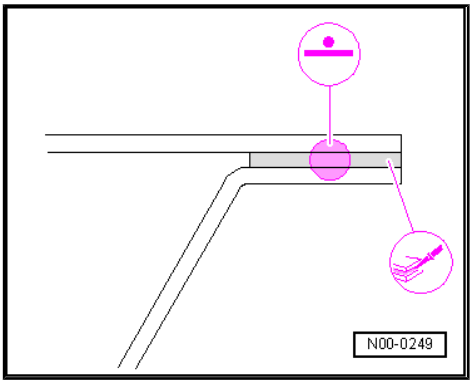

A conductive adhesive is used between plates for the spot welding bonding, and therefore a through welding may be achieved.

Overlap width of the spot welding bonding surface shall be no more than 1 mm. You must align the bonding surface if necessary.

Welding current is not allowed to be increased for the spot welding bonding. Due to extrusion of the adhesive, the pre-pressing period must be extended by around 30-50 minutes. The produced gas must be discharged.

5.3 Repair method for replacing the parts

In addition to spot welding the adhesive, adhesive DA 001 730 A1 and pneumatic spray gun -V.A.G 2005- may be used in combination.

There are following different operation methods according to the welding methods (spot welding and plug welding) in case of both bonding and welding:

5.3.1 Spot welding and bonding

In case of spot welding and bonding for repair, which is like batch production, renew the areas of all the welding spots and bonding points.

In case of welding problems, such as three-layer steel plate connection, only replace the outer plate, and still set the repair welding spot on the“old”welding spot.

5.3.2 Plug welding and bonding (if spot welding is impossible)

If the spot welding gun fails to reach a certain bonding area, plug welding may be adopted in this area.

In this case, give up using adhesive in order to ensure the welding quality. Plug welding spacing is set as 15 mm.

5.3.3 Welding fume ventilator

If spot welding is in combination with spot welding adhesive, use a standard ventilation device, just the same as welding galvanized steel plates.

5.3.4 Preparations

Before applying adhesive, the sheet metal parts to be welded must match up.

There must be neither primer and residual adhesive on the bonding surface in the welding area, nor dirt and grease.

In addition, there shall be no more conventional zinc material to be sprayed in the boding area.

Due to extrusion of the adhesive in case of welding, the welding area without paint will come into contact with the adhesive, and therefore corrosion protection must be ensured.

5.3.5 Trimming

– Remove the adhesive that flows out.

– Corrosion protection measures ⇒ page 22 .

– Paint the body ⇒ surface technical/chemical material folder.

Protected by copyright. Copying for private or commercial purposes, in part or in whole, is not permitted unless authorised by Volkswagen AG. Volkswagen AG does not guarantee or accept any liability with respect to the correctness of information in this document. Copyright by Volkswagen AG.
satelettronica

6 Corrosion protection measures

6.1 Corrosion protection

After the trimming, the material (cavity corrosion protection wax - DCN 300 KD1 Z2- or inner cavity spray wax - DCN 330 KD2 Z1-) specified by the manufacturer must be used to restore the adopted ex-factory corrosion protection measure.

⇒ See the paint repair manual

Protected by copyright. Copying for private or commercial purposes, in part or in whole, is not permitted unless authorised by Volkswagen AG. Volkswagen AG does not guarantee or accept any liability with respect to the correctness of information in this document. Copyright by Volkswagen AG.

satelettronica

7 Waste disposal instructions

7.1 Waste disposal

In order to realize recycling of the repaired or maintained vehicle parts, Volkswagen and Audi must perform a sorted collection of the produced residual materials first.

Presort the materials according to the following material groups:

- Steel plate or iron material (“scrap steel”) → waste recycler or metal pulverizing enterprise
- Aluminium →Kassel engine recycling: Waste recycler or professional engine recycler
- Tyre → partial delivery for retreading
- Plastic → recycled through local waste processors
- Battery → recycled through local waste processors
- Waste oil → current waste disposal route
- Brake fluid → in material recycling preparation process
- Anti-freezing fluid → in material recycling preparation process
- Refrigerant → current waste disposal route
- R 12 refrigerant oil → same as engine oil, refrigerant oil R 134a → in material recycling preparation process
- For the damping devices such as the bumper shock absorber → drain the oil, and discard it in the usual way
- For inflated shock absorbers, such as air pressure tappet → exhaust the gas, collect the oil that flows out, and include it into the current waste disposal method.
- Separate the materials into different categories, in order to precisely recycle them according to the categories. For example: Remove the tyres from the rims, and dispose them respectively.

satelettronica

7.2 Air pressure tappet exhaust

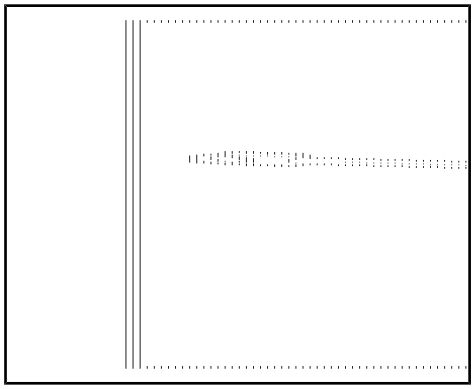

– Hold the air pressure tappet by an area x=50 mm in a vice.

> **WARNING**
>
> *The vice is only allowed to hold this range, otherwise there will be a risk of an accident!*

– Saw at the first 1/3 point of the whole air pressure tappet cylinder length (using the end of the plunger lever of the cylinder as a reference point).

Note

- *Protective goggles shall be worn during the sawing.*
- *Use a piece of cloth to cover the sawed area, in order to block the oil that spouts out.*
- *Dispose the oil and the cloth according to current waste disposal route.*

7.3 Airbag

> **WARNING**
>
> *There is a risk in case of scrapping the airbags not detonated.*

7.3.1 Waste disposal

Since December 1, 1997, Volkswagen has been recycling all airbags/seat belt tensioners not triggered within the material disposal range for free. The recycling is carried out by the authorized sales centre. The blasting components detonated in an accident may be disposed as scrap or industrial waste similar to household waste.

Protected by copyright. Copying for private or commercial purposes, in part or in whole, is not permitted unless authorised by Volkswagen AG. Volkswagen AG does not guarantee or accept any liability with respect to the correctness of information in this document. Copyright by Volkswagen AG.
satelettronica

8 Contact corrosion protection

8.1 Connection of aluminium alloy/magnesium alloy with steel

Note

- *In case of connecting aluminium alloy or magnesium alloy with steel, you must follow the corrosion protection measures described in the following. At the bolt connection points between aluminium alloy or magnesium alloy and steel:*
- *Fenders*
- *Engine hood*
- *All doors*
- *Trunk lid, protective film must be used.*
- *In case of screw aluminium alloy or magnesium alloy on steel, you are only allowed to use a bolt pre-coated with thread locking adhesive, and this bolt may only be used once. Thread locking adhesives - DCN 154 100 Z1- and -DCN 154 100 Z1- are a chemical protection layer, in order to prevent contact corrosion.*
- *Electric conduction is not allowed in the non-metal connection element (door seal and rear trunk lid seal) or the sealing element between two different metals.*
- *The original accessories dedicated to Lupo 3L start from part number 6E.*
- *See corresponding repair manual repair groups for the dedicated process tips:*
- *Lupo 1999 ⇒ Internal body repair*
- *Lupo 1999 ⇒ External body repair*

Protected by copyright. Copying for private or commercial purposes, in part or in whole, is not permitted unless authorised by Volkswagen AG. Volkswagen AG does not guarantee or accept any liability with respect to the correctness of information in this document. Copyright by Volkswagen AG.

satelettronica

9 Steel plate repair

9.1 High-strength body plate

More and more high-strength steel plates are used in out vehicles. The range of application for this steel plate is shown in the illustration repair group 00 in the body repair manual.

What is the high-strength steel plate?

The appearance is similar to common steel plate, but due to the alloy composition different from the common body steel plate, it has a higher yield point. This means that the same stress on the steel plates, the pit on the high-strength steel plate is not as deep as that on the common body steel plate.

What are the necessary considerations in case of levelling?

Use a common tool to level. Since a bigger projection has a stronger resilience performance, apply a larger force if necessary. There may be material breakage in case of material bending deformation.

What are the necessary considerations in case of correction with a straightener or a hydraulic press?

Since the high-strength steel plate has a larger resilience performance, a greater stretching must be achieved than the common steel plate before restoration to the required position. Due to a large stress, the common steel plate welded together with the steel plate will also bear a great load. This increases the stress on the related parts. In order to prevent the common steel plate from deformation or cracking, you must use additional fixing measures.

WARNING

- *The overstretched high-strength steel plate will suddenly pop up by a length over the expected!*
- *For safety, the same as the common body steel plate, do not heat the high-strength body steel plate in case of restoring the deformation.*

What are the necessary considerations in case of painting?

If the drying radiation heater heats the high-strength steel plate too fast, the steel plate will deform. If the steel plate is firmly connected with the reinforcement under it through welding spots or bonding, there will be pits in these positions. These pits may still be seen on the cooled steel plate. For this reason, the radiation heater is only allowed to slowly rise to the maximum power. It is safe for drying in a drying room.

9.2 Galvanized body parts

9.2.1 Preparations

– The bottom protection layer/sealing material may only be heated with an electric blower (maximum 420°C) or removed with a wire brush.

– The paint material and the primer material are removed with a paint remover (LLE 812 000 A2) or a plastic brush.

Protected by copyright. Copying for private or commercial purposes, in part or in whole, is not permitted unless authorised by Volkswagen AG. Volkswagen AG does not guarantee or accept any liability with respect to the correctness of information in this document. Copyright by Volkswagen AG.
satelettronica

9.2.2 Part cutting

– Try not to use the cutting method (cutting torch) with heating process (only the rough cutting).

– In order not to damage the zinc layer in the separation area, the mechanical separation method is preferred, such as: Body saw.

9.2.3 Connection process

The resistance pressure spot welding (RP) only causes slight burn to the zinc layer in the spot centre. In addition, the zinc protection ring formed around the welding spot provides corrosion protection.

Whenever possible, always use the resistance pressure spot welding (RP).

Pay attention to different zinc layer thicknesses (carry out trial welding) in case of performing resistance pressure spot welding (RP).

The inert gas protection plug welding (SG) will not replace the resistance pressure spot welding (RP) until the other methods are infeasible.

Make sure to apply welding primer (zinc spray - DCN 007 500 Z2-) between the connecting flanges.

Apply the variable filler (ALN 787 200 10) at the connection.

9.3 Welding on the galvanized body steel plate

WARNING

Since there is toxic zinc oxide in the welding fume arising from welding of the galvanized steel plates, a good ventilation in the operation site must be provided, and a proper smoke ventilator (such as -V.A.G 1586-) shall be used to discharge the smoke.

9.3.1 Inert gas protection plug welding SG of the galvanized steel plate

In order to ensure the repair welding connection quality, you must follow the following instructions:

- You must raise the correct intensity (amp) of the spot welding transformer.
- In addition, you must readjust the welding wire feeding, as voltage raising alone only produces a large electric arch (insufficient melting and porous weld structure).
- Use the cylindrical air nozzle to replace the conical air nozzle (gas blisters after being ejected from the narrow air nozzle).
- The welding torch moves from 0° to 10° in the position around 12 mm above the welding body.
- Try to use soft welding wires.
- Both CO_2 and a gas mixture may be used as the protection gas.

Protected by copyright. Copyright by Volkswagen AG. Volkswagen AG does not guarantee or accept any liability with respect to the correctness of information in this document. Copyright by Volkswagen AG.
satelettronica

9.3.2 Resistance pressure spot welding RP of the galvanized steel plate

In case of using the resistance pressure spot welding to welding the galvanized steel plate, you must pay attention to the following several instructions:

9.3.3 Welding transformer

- Raise the welding current (amp) by around 10% ,maximum 30%.

It is better to extend the welding period on the welding transformer with the“Welding Period Adjustment”function.

- The welding period extension value (approximate value) is according to the thickness of the steel plate:
- 0.6 mm -at least 7 periods
- 0.8 mm -at least 9 periods
- 1.0 mm -at least 11 periods

No spray on the welding spot indicates that the selected welding period is correct.

9.3.4 Welding clamp

- Use the hard copper electrode (copper-chromium-zirconium alloy) of a high heat resistance (>400°C).
- Often wipe the hard copper electrode, or trim a side contact surface of a diameter of ∅4 mm.
- Increase the clamping force of the electrode.

9.4 Tearing test

First weld on test plates, and then perform the tearing test, in order to determine the beat welding result.

Use a force vertical to one steel plate surface to tear a narrow strip of sample piece from the other steel plate through winding.

At this time, if the welding spot is of a good quality, the sample piece is not torn on the contact surface, and“Stays There As a Whole”.

Protected by copyright. Copying for private or commercial purposes, in part or in whole, is not permitted unless authorised by Volkswagen AG. Volkswagen AG does not guarantee or accept any liability with respect to the correctness of information in this document. Copyright by Volkswagen AG.

satelettronica

10 Aluminium repair

Note

- *This instruction only applies to vehicles of a common steel structure and equipped with aluminium plates on the body.*
- *The range of application for the aluminium plates is shown in the illustration repair group 00 in the body repair manual.*
- *In addition, the following repair manual also applies to vehicles (such as Audi A8) of a full-aluminium structure ⇒ body repair; Audi vehicle; aluminium; brief instructions*

WARNING

Use tools applying to steel material or aluminium material.

Suggestion: Aluminium tool assembly -V.A.G 2010/2- in the tool trolley

10.1 Painting

The body painting is the same as the steel body.

It is only allowed to use materials against aluminium corrosion. ⇒ Paint repair manual .

WARNING

Remove adhesive on the ground line after painting.

10.2 Surface treatment

Only use a wire brush made of stainless steel.

Do not use a rough grinding wheel due to lubrication effect.

Use a grinding wheel of a grit size P 80 to P 200.

You must use cleaning device DA 009 802 in case of using a grinding wheel, drill bit, milling cutter and disk cutter.

Clean the surface with nitro diluent.

The other surfaces are treated the same as steel.

Note

Cover the aluminium parts in case of grinding and welding the steel parts. Immediately remove the iron filings dropped on the aluminium, otherwise contact corrosion may occur.

WARNING

Use tools applying to steel material or aluminium material.

Suggestion: Aluminium tool assembly -V.A.G 2010/2- in the tool trolley

Protected by copyright. Copying for private or commercial purposes, in part or in whole, is not permitted unless authorised by Volkswagen AG. Volkswagen AG does not guarantee or accept any liability with respect to the correctness of information in this document. Copyright by Volkswagen AG.
satelettronica

10.3 Levelling

Aluminium material is easier than steel material to incur material stretching.

You shall avoid using sharp-edge or hard levelling tools (such as: Steel hammer), and replace with a plastic hammer, wood hammer or aluminium hammer.

Direct levelling methods (such as placing an aluminium plate between the fixing support and the levelling hammer) shall be reduced.

Levelling of aluminium plates is different from steel plates, and starts from the projection centre.

Pressing shall be more frequent than knocking for aluminium plates.

In case of trimming, gently press the bracket. Trimming with an excessive force may cause material stretching. For this reason, you shall use hard wood brackets.

However, if the material still incurs stretching, hot air may be used to perform contraction in order to remove it.

> ⚠ **WARNING**
>
> *The maximum contraction temperature through hot air is 150° C.*

In case of cracks during levelling, you shall replace this part!

10.4 Temperature control for heating

Tempering colour may not be identified for aluminium heating.

For this reason, you must use a temperature indicating crayon or temperature indicating strip to determine the temperature.

The temperature indicating crayon and the temperature indicating strip will change their colours when reaching to the specified temperature.

A - Heating range

B - Blank area

C - Temperature indicating crayon or temperature indicating strip

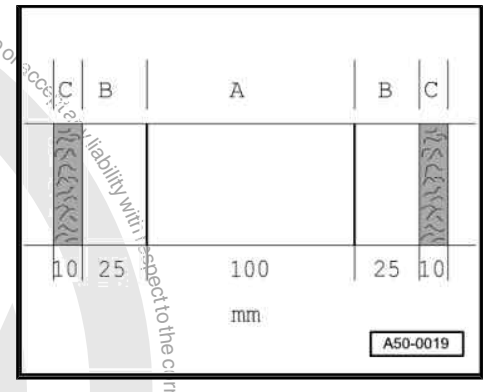

Protected by copyright. Copying for private or commercial purposes, in part or in whole, is not permitted unless authorised by Volkswagen AG. Volkswagen AG does not guarantee or accept any liability with respect to the correctness of information in this document. Copyright by Volkswagen AG.

satelettronica

11 Plastic repair method

11.1 Material

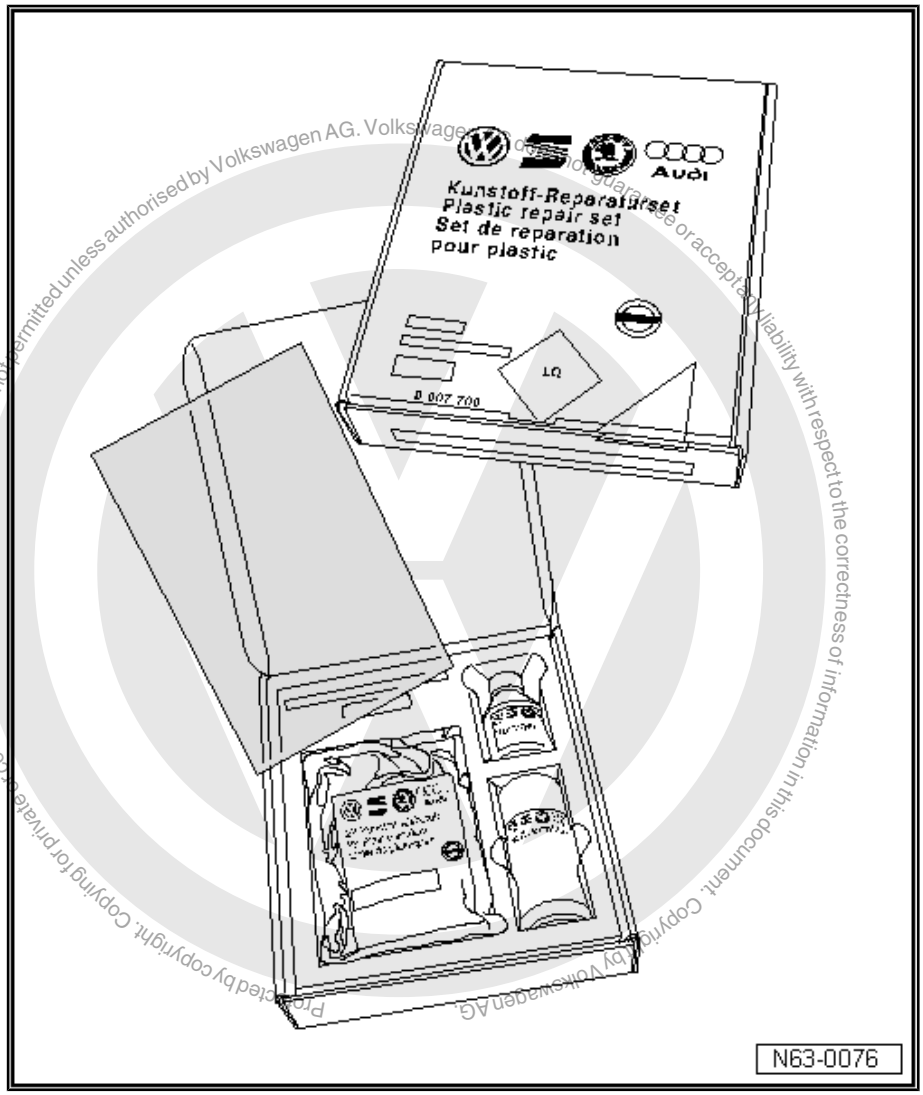

Protected by copyright. Copying for private or commercial purposes, in part or in whole, is not permitted unless authorised by Volkswagen AG. Volkswagen AG does not guarantee or accept any liability with respect to the correctness of information in this document. Copyright by Volkswagen AG.

satelettronica

WARNING

Pay attention to general accident prevention regulations. It is not allowed to repair safety related parts of which the functions (such as collision absorption) may be not guaranteed any more after repair.

Plastic repair performed using plastic repair kit D 007 700 (containing plastic part repair adhesive - DCN 180 KU1 Z1- , plastic part surfactant - DCN 822 150 Z1- , plastic cleaning agent - DCN 195 850 Z2- and mixing nozzle - DCN 001 001-) may be interpreted as repair of painted body plastic parts, such as bumpers and rearview mirror covers. Check with care before repair to see the repair feasibility as well as the economic repair worth (repair/ new part).

You may also repair plastic parts with a texture surface. However, you may not meet the quality standard of a new part surface.

11.2 Repairing the pit

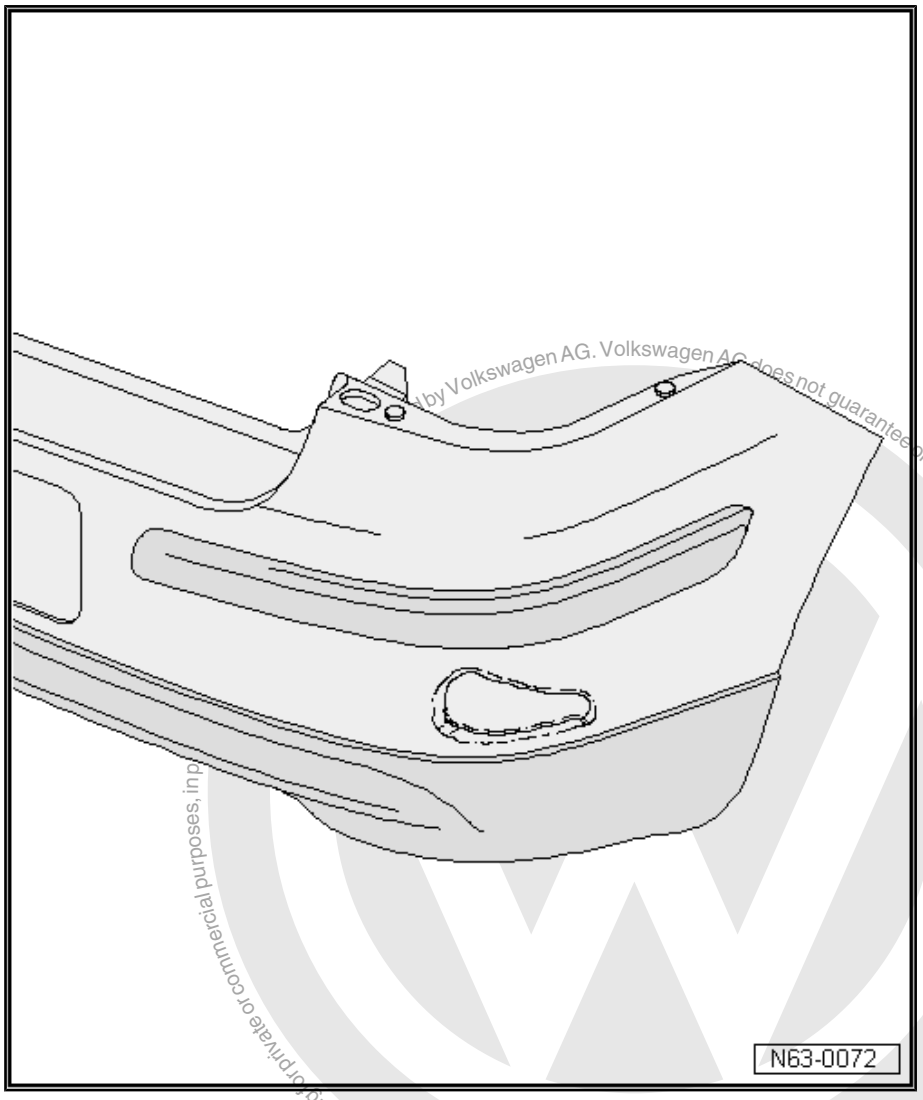

- First clean and dry the part to be repaired.
- Now use an electric blower to heat the pit area, till the pit may be suitable for being pressed out by using a proper tool.
- Use a sandpaper of a grit size 120 to grind the pit area.
- Then clean the repair area with plastic cleaning agent - DCN 195 850 Z2- . The ventilation period is 5 minutes.
- Now spray a thin layer of plastic surfactant - DCN 822 150 Z1- , and notice that the ventilation period is 10 minutes.

Protected by copyright. Copying for private or commercial purposes, in part by Volkswagen AG. Volkswagen AG does not guarantee or accept any liability with respect to the correctness of information in this document. Copyright by Volkswagen AG.
satelettronica

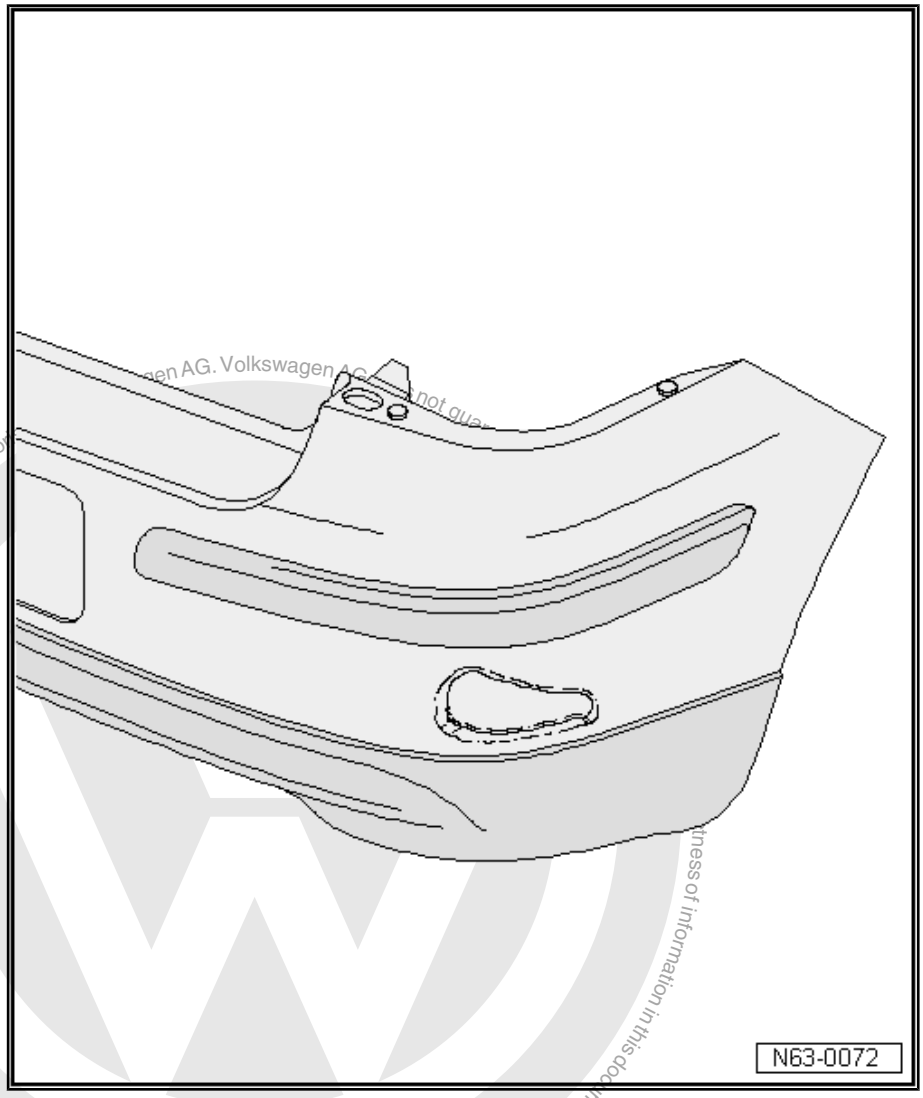

- Now you may use plastic surfactant - DCN 822 150 Z1- to fill the still uneven area, and use a scraper to smooth it.
- An infra-red radiator may be used for accelerated hardening. Place it at 60°C-70°C for 15 minutes.
- Use a sandpaper of a grit size 120 to smooth the repair area.
- Remove the smoothing dust.
- Now spray a thin layer of plastic surfactant - DCN 822 150 Z1- , and notice that the ventilation period is 10 minutes.
- Body painting shall be carried out according to the paint repair manual.

satelettronica

11.3 Repairing the scratch

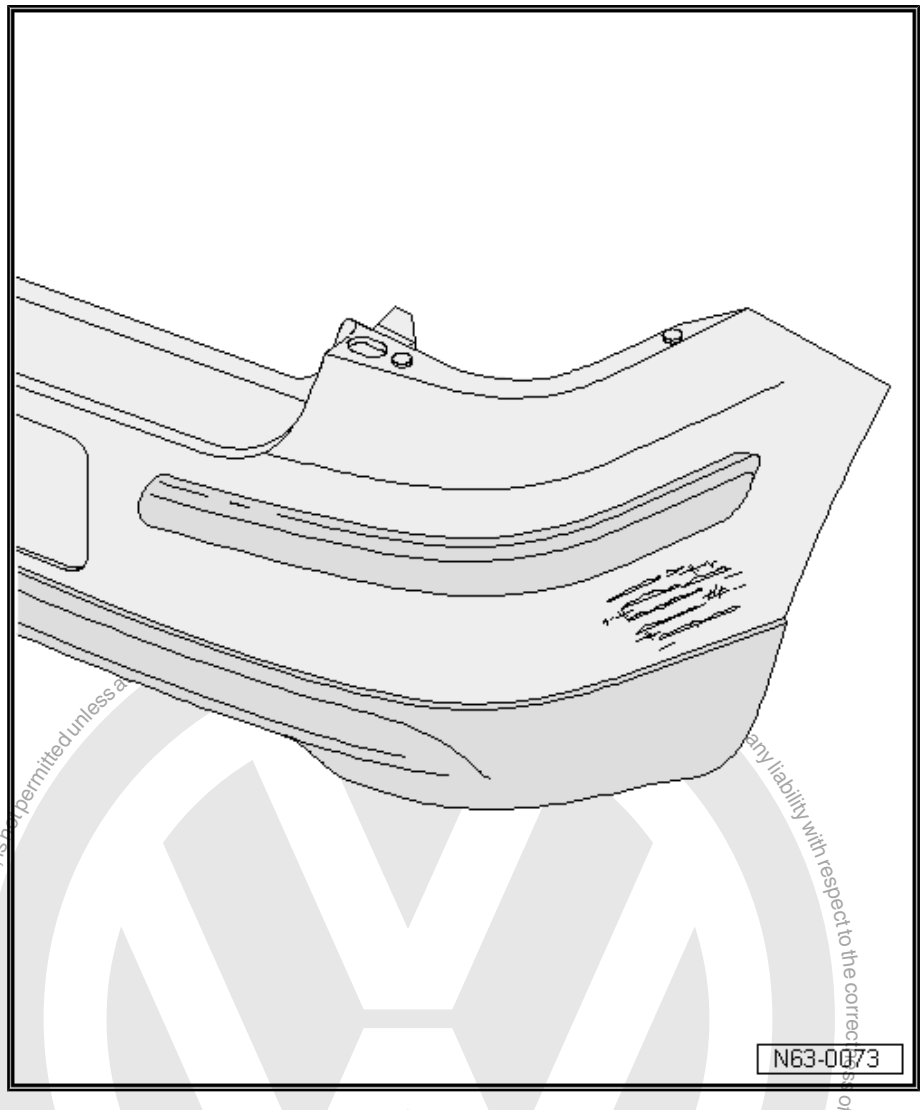

- First clean and dry the part to be repaired.
- You may use a sandpaper of a grit size 80 to remove the raised material.
- Then clean the repair area with plastic cleaning agent - DCN 195 850 Z2- . The ventilation period is 5 minutes.
- Now spray a thin layer of plastic surfactant - DCN 822 150 Z1- , and notice that the ventilation period is 10 minutes.
- Now you may use plastic repair adhesive - DCN 180 KU1 Z1- to fill the still uneven area, and use a scraper to smooth it.
- An infra-red radiator may be used for accelerated hardening. Place it at 60°C-70°C for 15 minutes.
- Use a sandpaper of a grit size 120 to smooth the repair area.
- Remove the smoothing dust.
- Now spray a thin layer of plastic surfactant - DCN 822 150 Z1- , and notice that the ventilation period is 10 minutes.
- Body painting shall be carried out according to the paint repair manual.

satelettronica

11.4 Repair the crack

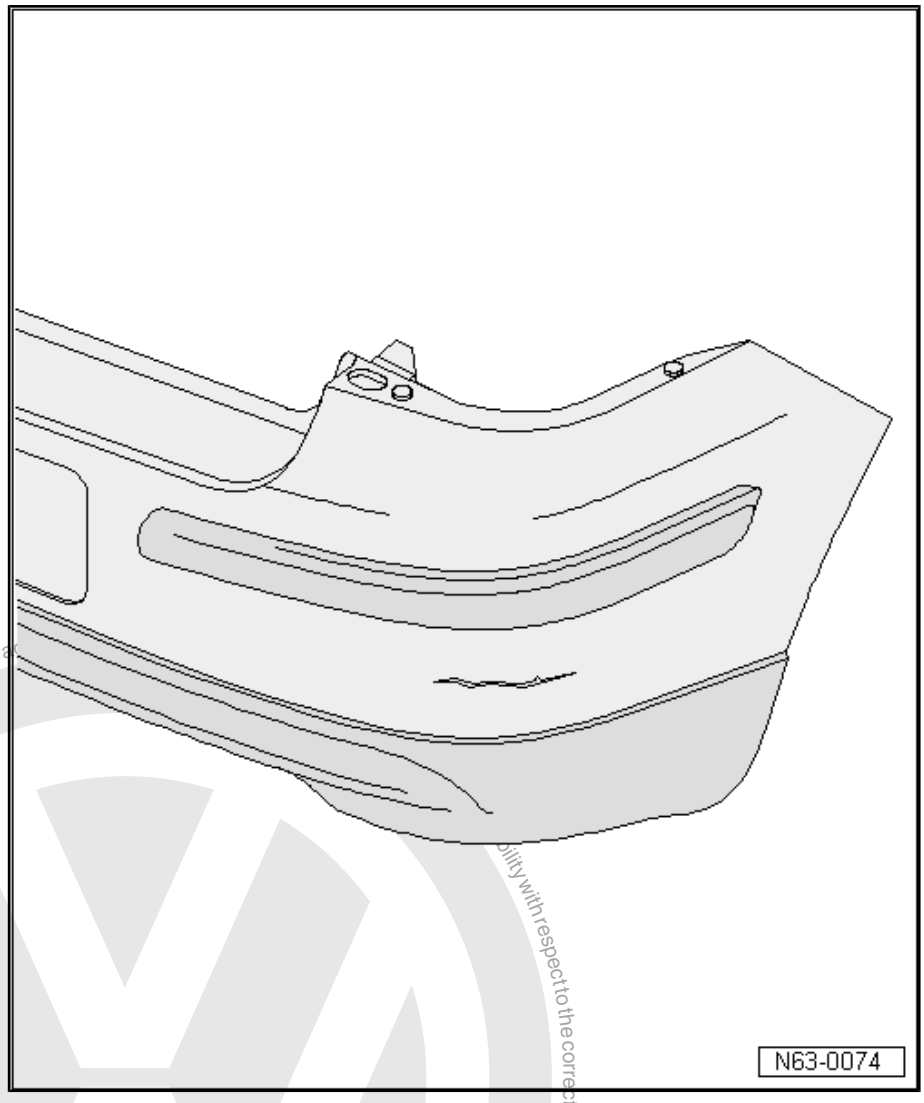

- First clean and dry the part to be repaired.
- The unevenness caused by stretching may be removed through the crack drilling (5 mm) and V polishing.
- Then clean the repair area with plastic cleaning agent - DCN 195 850 Z2- . The ventilation period is 5 minutes.
- Now spray a thin layer of plastic surfactant - DCN 822 150 Z1- , and notice that the ventilation period is 10 minutes.
- First you shall use plastic part repair adhesive - DCN 180 KU1 Z1- on the back of the part to be repaired plus reinforced non-woven cloth D 002 KD A1, in order to allow it to overlap the repair area by at least 20 mm.
- An infra-red radiator may be used for accelerated hardening. Place it at 60°C-70°C for 15 minutes.
- Then you may use plastic repair adhesive - DCN 180 KU1 Z1- to fill the polished front area, and use a scraper to smooth it.
- You shall also use the infra-red radiator on the front in the above method for accelerated hardening.
- Use a sandpaper of a grit size 120 to smooth the repair area.

satelettronica

– Remove the smoothing dust.
– Now spray a thin layer of plastic surfactant - DCN 822 150 Z1- , and notice that the ventilation period is 10 minutes.
– Body painting shall be carried out according to the paint repair manual.

11.5 Repairing the small hole (the diameter is more than 30 mm)

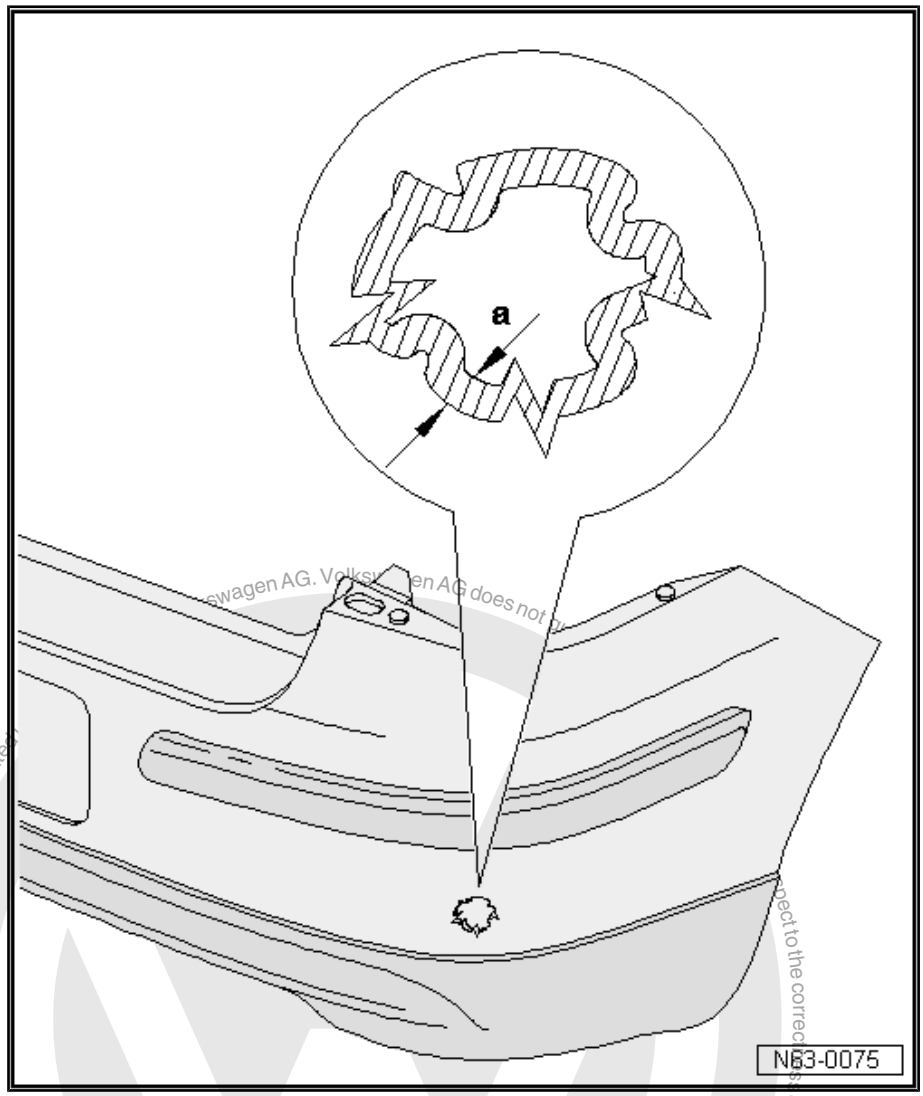

– First clean and dry the part to be repaired.
– Use a sandpaper of a grit size 120 in a funnel shape to grind a 10-20 mm (size a) repair area.
– Now spray a thin layer of plastic surfactant - DCN 822 150 Z1- , and notice that the ventilation period is 10 minutes.
– Use a sandpaper of a grit size 120 to burr the area.
– Then clean the repair area with plastic cleaning agent - DCN 195 850 Z2- . The ventilation period is 5 minutes.
– Now spray a thin layer of plastic surfactant - DCN 822 150 Z1- , and notice that the ventilation period is 10 minutes.
– First you shall use plastic part repair adhesive - DCN 180 KU1 Z1- on the back of the part to be repaired plus reinforced non-

satelettronica

woven cloth D 002 KD A1, in order to allow it to overlap the damage area by at least 20 mm.

- An infra-red radiator may be used for accelerated hardening. Place it at 60°C-70°C for 15 minutes.
- Then you may use plastic repair adhesive - DCN 180 KU1 Z1- to fill the polished front area, and use a scraper to smooth it.
- You shall also use the infra-red radiator on the front in the above method for accelerated hardening.
- Use a sandpaper of a grit size 120 to smooth the repair area.
- Remove the smoothing dust.
- Now spray a thin layer of plastic surfactant - DCN 822 150 Z1- , and notice that the ventilation period is 10 minutes.
- Body painting shall be carried out according to the paint repair manual.

11.6 Plastic repair (glass fibre material)

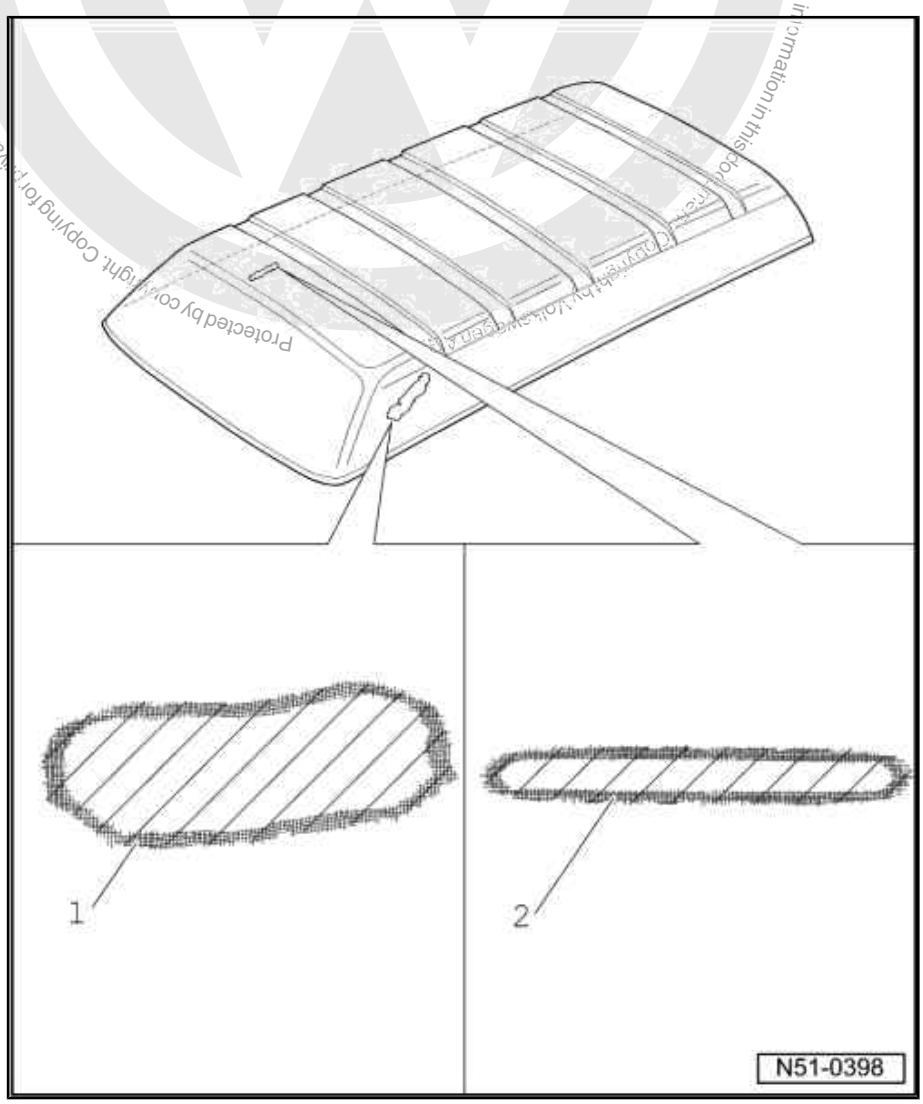

Protected by copyright. Copying for private or commercial purposes, in part or in whole, is not permitted unless authorised by Volkswagen AG. Volkswagen AG does not guarantee or accept any liability with respect to the correctness of information in this document. Copyright by Volkswagen AG.

satelettronica

WARNING

Pay attention to general accident prevention regulations. It is not allowed to repair safety related parts of which the functions (such as collision absorption) may be not guaranteed any more after repair.

1- breakage position

- Glass fibre pad, polyester resin and hardening agent

2- surface damage

- Glass fibred-reinforced polyester resin and hardening agent

Note

Please pay attention to the instructions for use of the manufacturer in case of handling material.

11.7 Repair process

11.7.1 Repairing the breakage position

– Grind around the edge of the breakage position through tilting by 45°.

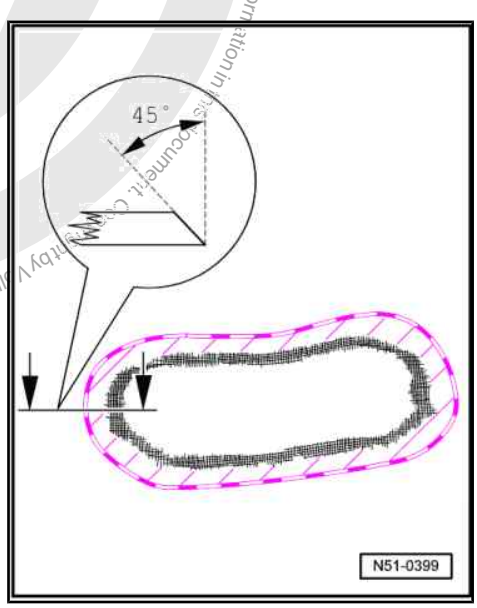

– Use a sandpaper of a grit size 150 to grind the surface (shadow area) about 100 mm around the breakage position, and clean with plastic cleaning agent - DCN 195 850 Z2- .

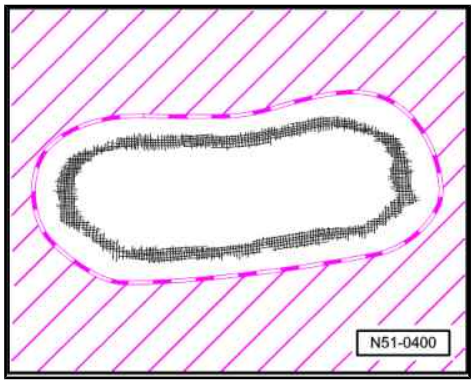

Protected by copyright. Copying for private or commercial purposes, in part or in whole, is not permitted unless authorised by Volkswagen AG. Volkswagen AG does not guarantee or accept any liability with respect to the correctness of information in this document. Copyright by Volkswagen AG.

satelettronica

– Cut to get three glass fibre pads:-1-overlapping the breakage position by around 25 mm,-2-overlapping by around 50 mm and-3-overlapping by around 75 mm.

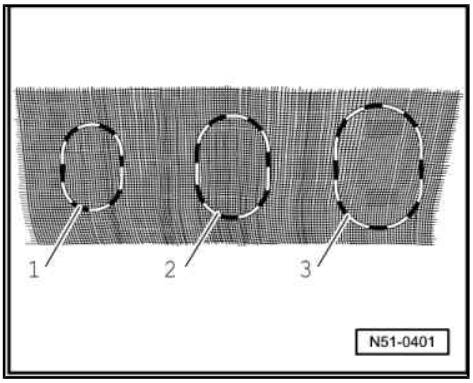

Note

For a large breakage position, it is suggested to make a holder with polystyrene foam plastic. Wrap the polystyrene foam plastic with common PE plastic adhesive tape without printing, in order to avoid contact with the polyester resin. Then use adhesive tape to fix the prepared holder inside the breakage position.

Lay the glass fibre pads

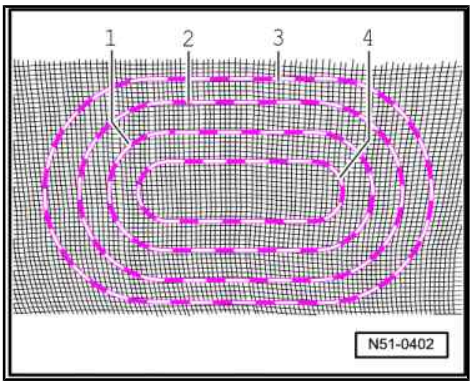

– Mix polyester resin (pay attention to the instructions for use of the manufacturer!)
– Apply a thin layer of polyester resin on the breakage/hole.
– Use polyester resin to soak the smallest glass fibre pad-1- , and lay it in breakage position-4-.
– The bubbles in polyester resin must be removed immediately using a sharp tool after the application.
– Use a sandpaper of a grit size 120 to smooth the applied material after hardening.
– Clean the repair area with plastic cleaning agent - DCN 195 850 Z2- .
– Use the second-2-and third-3-glass fibre pads to repeat the above operation.

11.7.2 Repairing the surface damage

– Polish the damaged surface in a V shape.
– Use a sandpaper of a grit size 150 to grind the surface (shadow area) about 50 mm around the surface damage position.

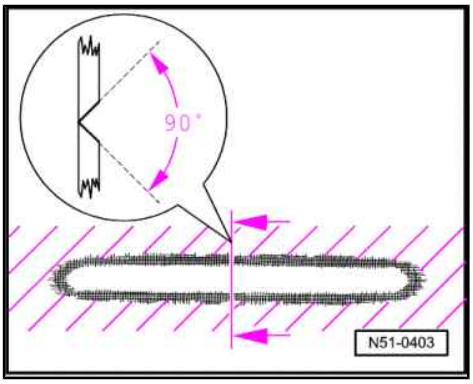

– Clean the repair area with plastic cleaning agent - DCN 195 850 Z2- .
– Mix glass fibre-reinforced polyester resin (pay attention to the instructions for use of the manufacturer), and apply it in the repair area (shadow area).
– Smooth the repair area after hardening, and clean with plastic cleaning agent - DCN 195 850 Z2- .

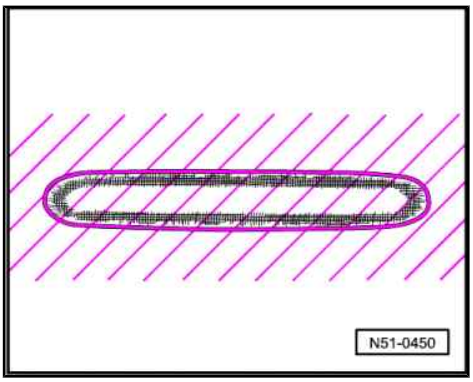

Protected by copyright. Copying for private or commercial purposes, in part or in whole, is not permitted unless authorised by Volkswagen AG. Volkswagen AG does not guarantee or accept any liability with respect to the correctness of information in this document. Copyright by Volkswagen AG.

satelettronica

12 Glass repair

12.1 Repairing the windshield

In addition to replacement of the windshield, there are other more economical methods to repair the damaged windshield by a rubble under some premises.

Coloured window glass, window glass with a colour plate or roof glass (Audi A8 and A6) may also be repaired, as their colours come from the coloured middle film.

Under the following premises, windshield repair is prior to replacement.

12.1.1 Premises

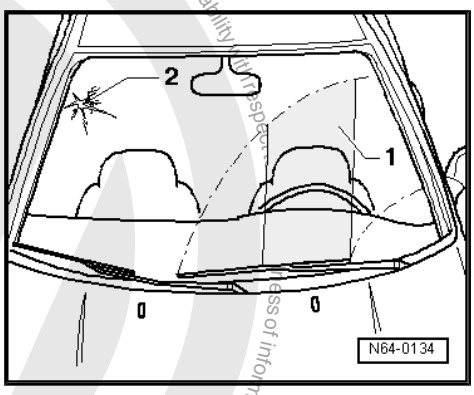

- The damaged area is not directly in the far vision field-1-. This area is a band (A4 size) of an about 29 cm width in the driver's direct vision centre in the driving direction, and its upper and lower edges are restricted by the windshield wiper wiping area.
- The crack -2- extending from the damaged area shall not be over 50 mm long and/or extend outward to the marginal area.
- The diameter of damaged area -1- shall not be over 5 mm.
- Middle film -2-or inner layer of glass -3- shall not be damaged.
- No dirt or moisture penetrates into the crack area.
- Therefore repair shall not be delayed in case of damage.

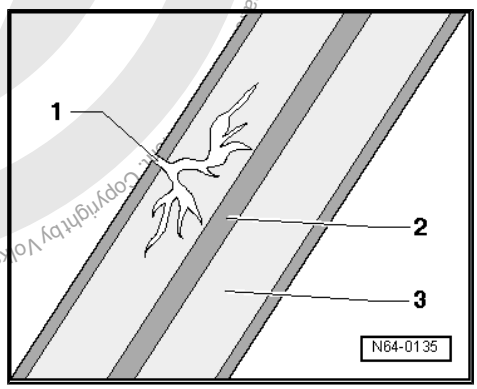

If the following damages are not in the far vision field or the edge area, repair is allowed:

Round hole

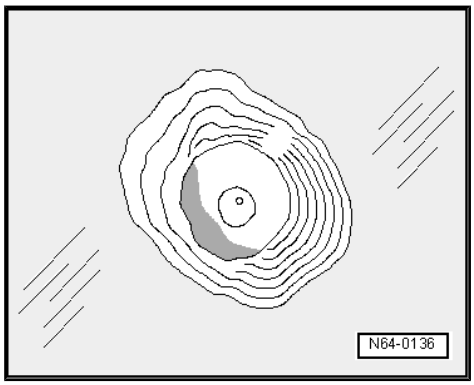

satelettronica

Combined fracture

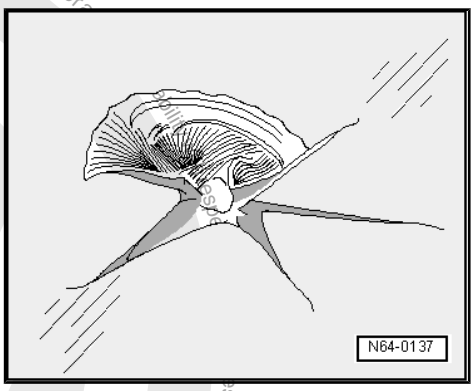

Star damage and crack

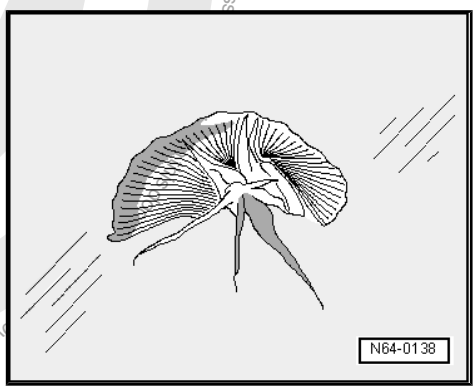

12.1.2 Required special tools, operating equipment, testing instruments and auxiliary tools

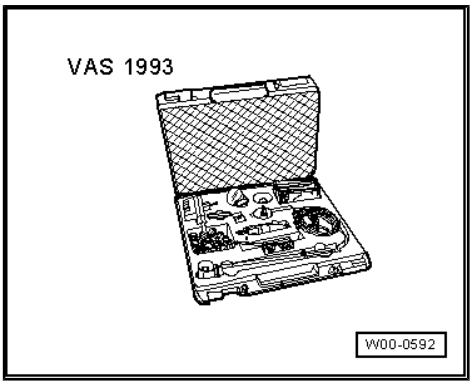

- -VAS 1993- windshield repair kit

Including the following tools:

Protected by copyright. Copying for private or commercial purposes, in part or in whole, is not permitted unless authorised by Volkswagen AG. Volkswagen AG does not guarantee or
satelettronica

1 - Transformer

2 - Resin scraper (1 set)

3 - Mirror

4 - Suction hook

- ❑ Use as a vacuum pump

5 - Tool holder

6 - Injector

- ❑ Placed in an opaque package after the first use

7 - Resin for at least 15 uses

8 - 12V electric drill

9 - Milling cutter and polishing assembly

10 - Scriber

11 - Ultraviolet lamp

12 - Film

13 - Battery connection cable

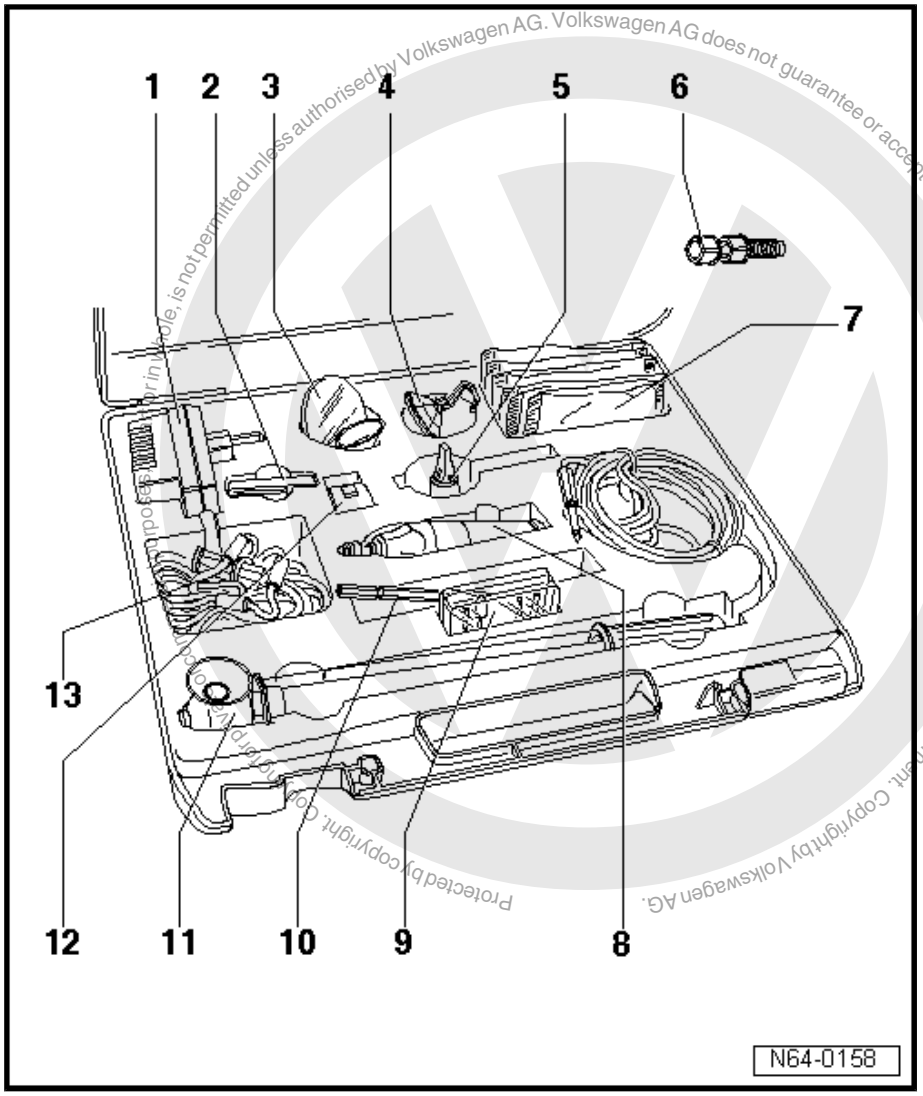

12.1.3 Repair description

- Repair is carried out in a place without direct sunlight.
- Temperature at the repair site must be close to room temperature.
- There shall be no water mist in the operation area.

– Use a hard material scriber to mark the striking area, but do not extend or remove the glass fragment at the same time.

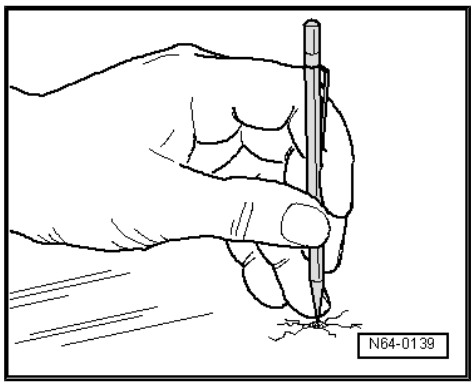

Protected by copyright. Copyright by Volkswagen AG. Volkswagen AG does not guarantee or accept any liability with respect to the correctness of information in this document. Copyright by Volkswagen AG. Reproduction, in whole, is not permitted unless authorised by Volkswagen AG.
satelettronica

– If moisture penetrates, use a suction hook for fixing from interior, and use an electric blower for drying. If moisture may not be removed, stop the repair.

– Place mirror -1-from interior, and adjust it to a position where you may observe the damaged area well.

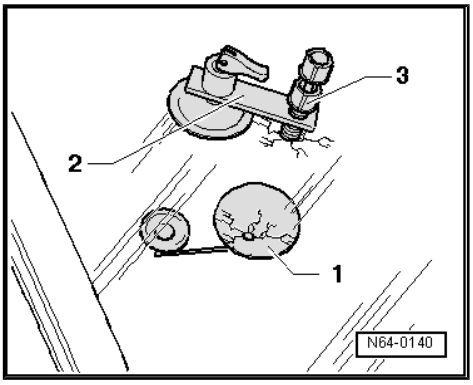

– Install tool holder -2-and injector-3- , allowing the rubber seal of the injector to be accurately placed in the damaged area. Check with the mirror.

– Completely screw out screw rod-2- from injector -1-.

– Add 2 to 3 drops of resin into injector-1- (resin amount for use is up to each damaged area).

– The resin bottle shall be immediately inserted into the package which will be sealed, as resin is sensitive to ultraviolet.

– Wait till resin flows to the rubber seal.

– Screw the screw rod-2- , in order to push and clamp injector-1-. If the striking points become clear from the centre, this indicates a correct pressure.

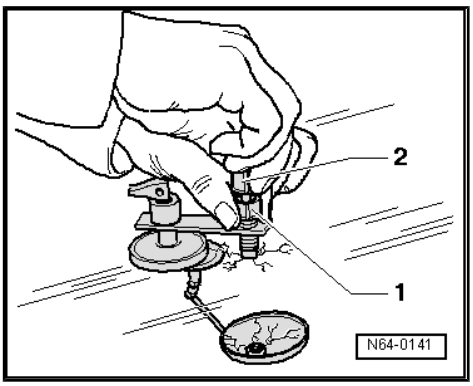

Note

It is a very slow process for the resin to penetrate into the crack, and this does not necessarily work right away.

– In 10 minutes, screw the injector to the thread end, in order to release pressure.

– Hold the injector to prevent it from sliding in case of loosening.

– Repeat this process (at least 3 times), till all the air in the damaged area is squeezed out. You can see clearly that the crack is gone. An 18-bar pressure is produced in case of the injector pressing.

– Use the mirror to check in case that the damaged area is fully filled. Then end the injection.

– After that, turn the holder and the injector aside and check that if the resin has penetrated into the whole damaged area.

– Once there is still some air inside, place the suction hook in the repair area to exhaust the air.

– Cut cover film -1- and hold it with your hand. Remove the injector together with the tool holder, and immediately apply the cover film on the damaged area (do not press), in order to prevent air from entering. The film contains an activator for resin hardening.

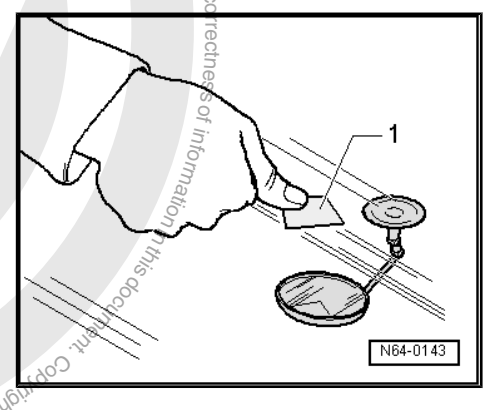

Protected by copyright. Copying for private or commercial purposes, in part or in whole, is not permitted unless authorised by Volkswagen AG. Volkswagen AG does not guarantee or accept any liability with respect to the correctness of information in this document. Copyright by Volkswagen AG.

satelettronica

– Immediately place the injector back into the package, as resin is sensitive to ultraviolet, and this allows reuse for the next repair. Place the released tool holder back into the tool kit, and remove the mirror and the holder.

– Fix ultraviolet lamp-1- above the damaged area. Use ultraviolet to shine the resin for 10 minutes, and then remove the ultraviolet lamp.

– Use a trimming blade to smooth the damaged area, and polish it with the 12 V drill and the polishing assembly if necessary.

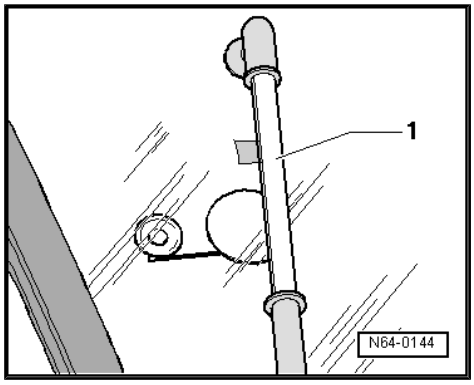

Note

- *There is no necessary maintenance period for the repaired vehicle, and it may be driven immediately.*
- *For some crack shapes, their crack residual traces may not be completely removed, and this will not impact the repair result.*
- *After the repair, the windshield is restored to the normal bearing capacity due to pressed-in and hardened artificial resin, and this avoids continuous expansion of the crack. Hardened resin is colourless, and has the same reflective index as glass.*

Protected by copyright. Copying for private or commercial purposes, in part or in whole, is not permitted unless authorised by Volkswagen AG. Volkswagen AG does not guarantee or accept any liability with respect to the correctness of information in this document. Copyright by Volkswagen AG.

satelettronica